STATE OF ILLINOIS
DEPARTMENT OF TRANSPORTATION

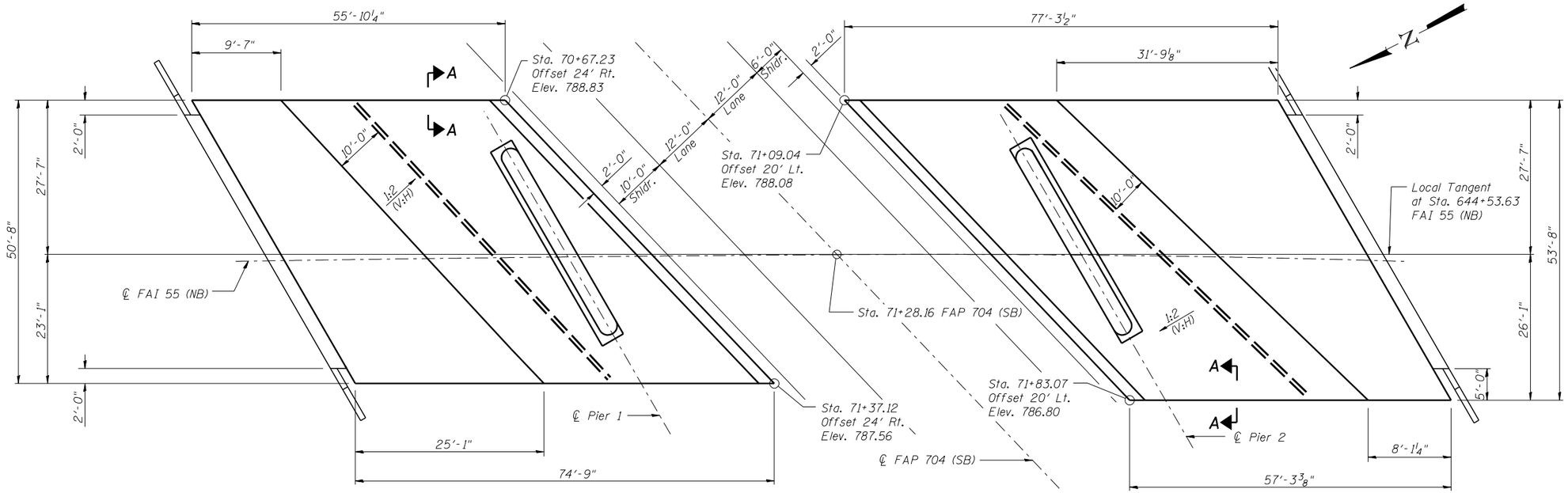

PLAN

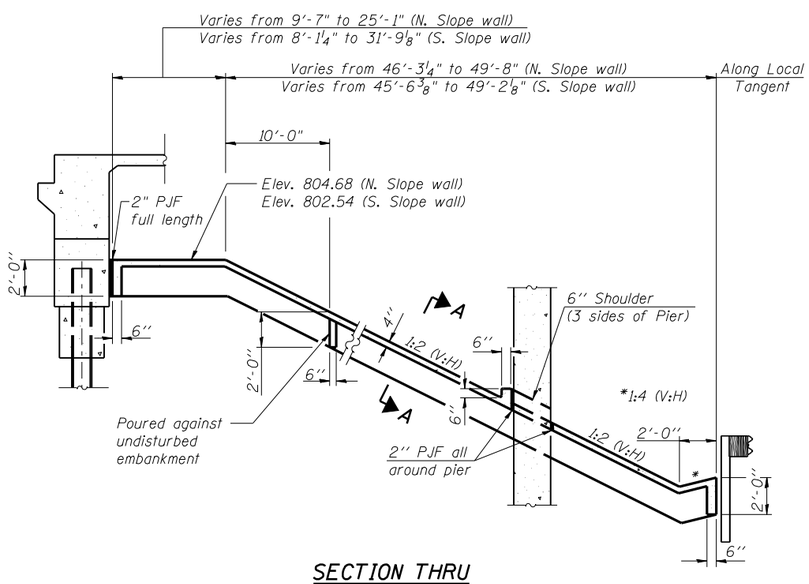

SECTION THRU
CONCRETE SLOPE WALL
(Horiz. dim. @ Rt. L's unless otherwise shown)

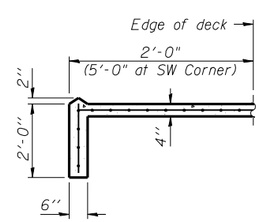

SECTION A-A

Notes:

Slope wall shall be reinforced with welded wire fabric, 6" x 6" - W4.0 x W4.0, weighing 58 lbs. per 100 sq. ft.

Stations and offsets are referencing ℄ FAP 704 (SB).

BILL OF MATERIAL

Item	Unit	Total
Slope Wall 4 Inch	Sq. Yd.	809

SLOPE WALL DETAILS
STRUCTURE NO. 057-0249

LIN ENGINEERING, LTD. Consulting Engineers Chatham, Illinois	SHEET NO. 3	F.A.I. RTE.	SECTION	COUNTY	TOTAL SHEETS	SHEET NO.
		55	(57-7HB-2)BR	MCLEAN	153	80
Designed By: ESH / Checked By: MTH / Drawn By: ESH	26 SHEETS			CONTRACT NO. 70520		
Date: April, 2010 / Files 057-0249.dgn			ILLINOIS	FED. AID PROJECT		