Notes:
Pour steps monolithically with cap.

STATE OF ILLINOIS
DEPARTMENT OF TRANSPORTATION

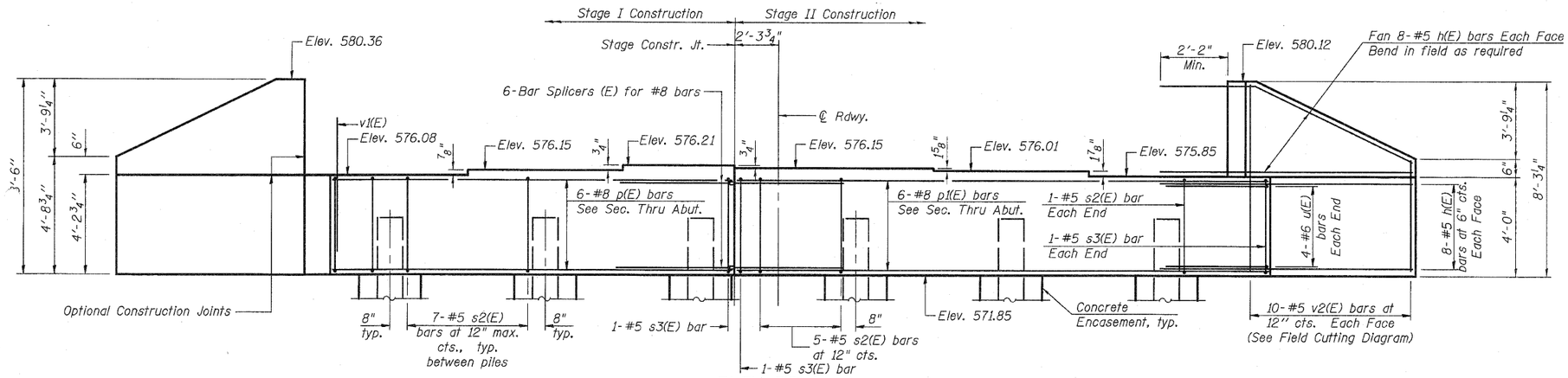

ELEVATION

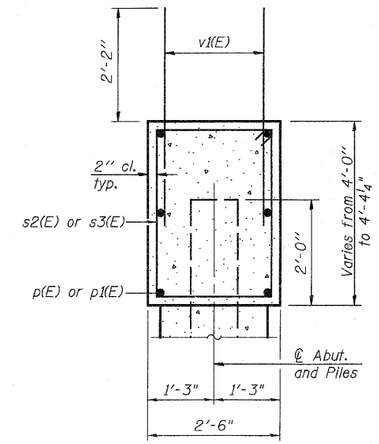

SEC. THRU ABUT.

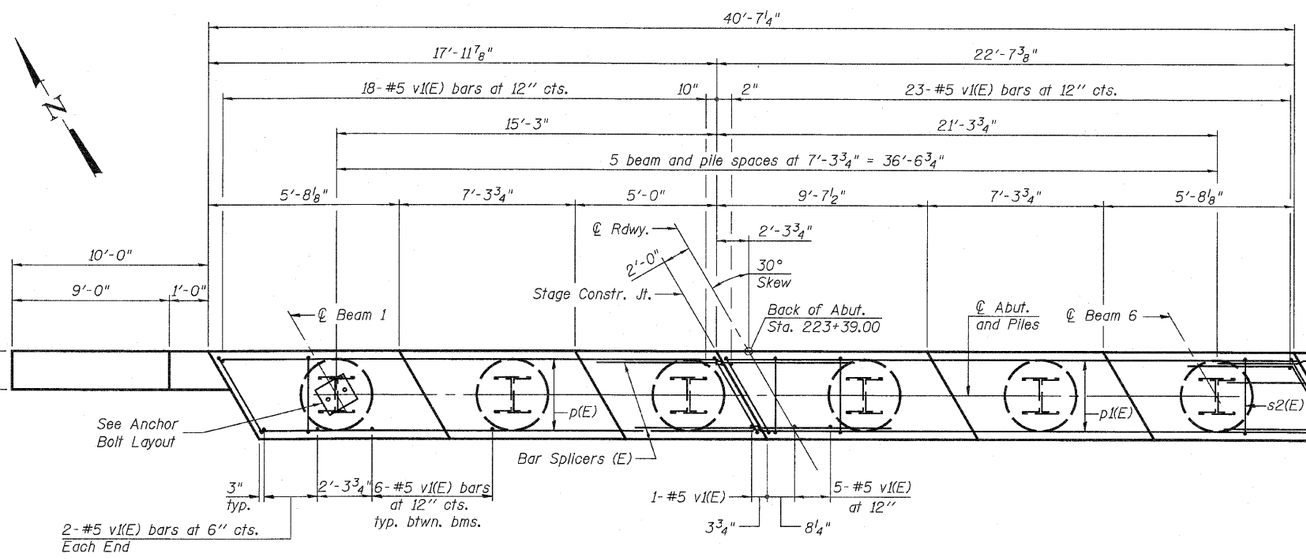

PLAN

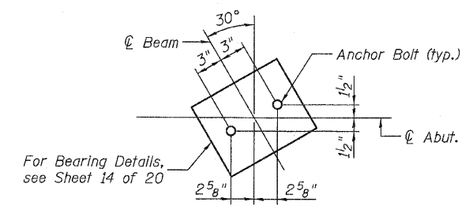

ANCHOR BOLT LAYOUT

BILL OF MATERIAL

Bar	No.	Size	Length	Shape
h(E)	64	#5	12'-0"	
p(E)	6	#8	17'-8"	
p1(E)	6	#8	22'-3"	
s2(E)	35	#5	12'-7"	
s3(E)	4	#5	13'-3"	
u(E)	8	#6	7'-7"	
v1(E)	75	#5	4'-4"	
v2(E)	20	#5	12'-2"	
Structure Excavation			Cu. Yd.	76
Concrete Structures			Cu. Yd.	20.6
Reinforcement Bars, Epoxy Coated			Pound	2640
Furnishing Steel Piles HP12x53			Foot	192
Driving Piles			Foot	192
Pile Shoes			Each	6
Concrete Encasement			Cu. Yd.	2.1

For details of Bar Splicers, see sheet 18 of 20.
For details of piles and Concrete Encasement, see sheet 17 of 20.

PILE DATA

Type: Steel-HP 12x53 with Pile Shoes
Nominal Required Bearing: 400 kips
Factored Resistance Available: 200 kips
Est. Length: 32'
No. Production Piles: 6
No. Test Piles: 0

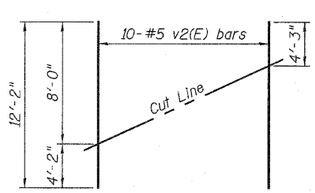

FIELD CUTTING DIAGRAM
Order v2(E) full length. Cut as shown and use remainder of bars in opposite wing.

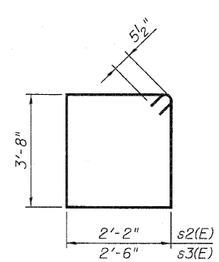

BARS s2(E) & s3(E)

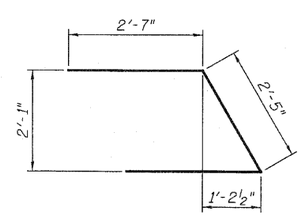

BAR u(E)

Johnson, Depp & Quisenberry
CONSULTING ENGINEERS
Springfield, Illinois

DESIGNED:	JDQ	DRAWN:	SJS
CHECKED:	DCD	CHECKED:	DCD

AI-L 11-1-09

NORTH ABUTMENT
STRUCTURE NO. 031-0044

SHEET 16 OF 20	F.A.P. RTE.	SECTION	COUNTY	TOTAL SHEETS	SHEET NO.
	10	38-1	GREENE	59	41
	STA. 222+94.00		CONTRACT NO. 76C15		
	FED. ROAD DIST. NO.	ILLINOIS	FED. AID PROJECT		