F.A.P.	SECTION	COUNTY	TOTAL SHEETS	SHEET NO.
330	465 VB-R-1	COOK	103	62
STA. 173+50 TO STA. 195+00				
FED. ROAD DIST. NO. 7	ILLINOIS	FED. AID PROJECT		

Contract # 60407 SHEET NO. S 29 of S60

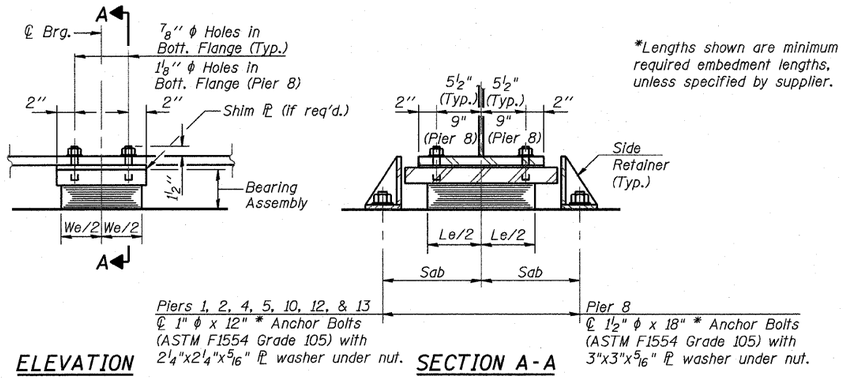

*Lengths shown are minimum required embedment lengths, unless specified by supplier.

ELEVATION SECTION A-A

TYPE I ELASTOMERIC EXP. BRGS. AT PIERS 1, 2, 4, 5, 8, 10, 12, & 13

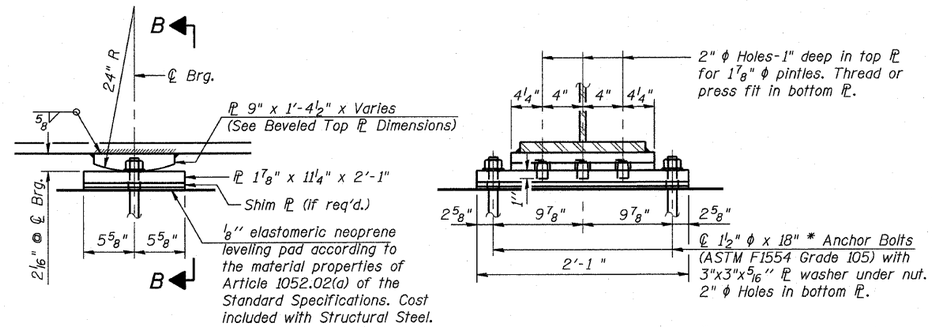

ELEVATION SECTION B-B

*Lengths shown are minimum required embedment lengths, unless specified by supplier.

FIXED BEARING AT PIERS 3 & 11

(24 Req'd.)

Notes:

Anchor bolts shall be ASTM F1554 all-thread (or an Engineer-approved alternate material) of the grade(s) and diameter(s) specified. ASTM A307 Grade C anchor bolts may be used in lieu of ASTM F1554 Grade 36 (Fy=36ksi). The corresponding specified grade of AASHTO M314 anchor bolts may be used in lieu of ASTM F1554.

Anchor bolts at fixed bearings may be either cast in place or installed in holes drilled after the supported member is in place.

Anchor bolts for side retainers may be cast in place or installed in holes drilled before or after members are in place.

Drilled and set anchor bolts shall be installed according to Article 521.06 of the Standard Specifications.

Side retainers and other steel members required for the bearing assembly shall be included in the cost of Elastomeric Bearing Assembly, Type I.

The structural steel plates of the Bearing Assembly shall conform to the requirements of AASHTO M 270 Grade 50.

Two 1/8 in. adjusting shims shall be provided for each bearing in addition to all other plates or shims and placed as shown on bearing details.

All bearing plates, side retainers, anchor bolts, nuts, washers and pintles shall be galvanized according to AASHTO M111 or M232 (as applicable).

H.S. bolts in bearing assembly shall be galvanized according to AASHTO M298 Class 50.

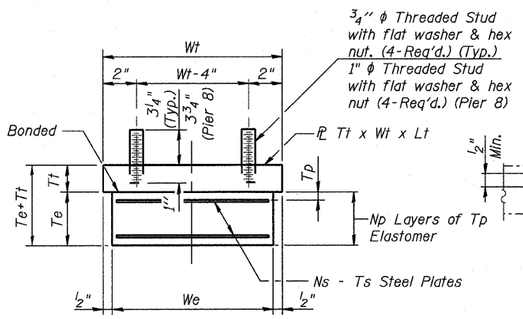

BEARING ASSEMBLY

Note:
Shim plates shall not be placed under Bering Assembly.

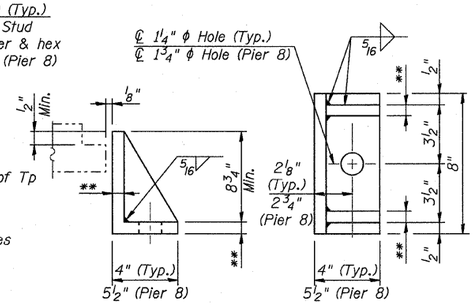

SIDE RETAINER

Equivalent rolled angle with stiffeners will be allowed in lieu of welded plates.

**Thickness=1/2" (Typ.) & 5/8" (Pier 8)

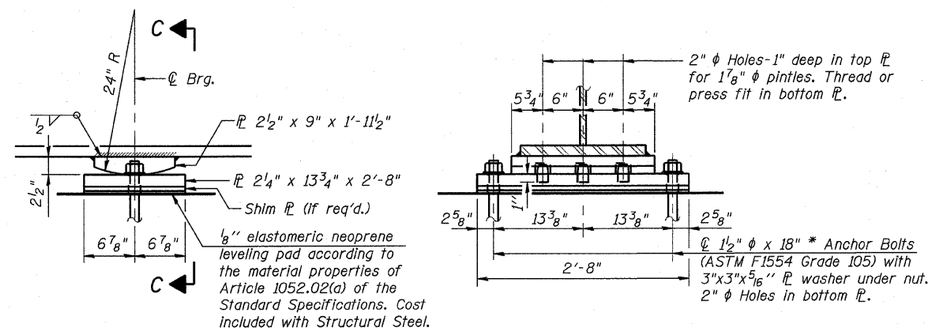

ELEVATION SECTION C-C

FIXED BEARING AT PIER 7

(12 Req'd.)

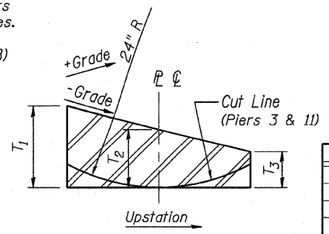

BEVELED TOP ℙ DETAIL

Cut Line only applicable to the fixed bearings at Piers 3 & 11.

BEVELED TOP ℙ DIMENSIONS

Location	Grade	T1	T2	T3
Pier 2	3.88%	3"	3 5/16"	3 5/8"
Pier 3	3.88%	1 7/8"	2 1/16"	2 1/4"
Pier 4	3.40%	3"	3 1/4"	3 1/2"
Pier 10	-2.69%	3 1/2"	3 1/4"	3"
Pier 11	-3.68%	2 1/4"	2 1/16"	1 7/8"
Pier 12	-3.98%	3 5/8"	3 5/16"	3"

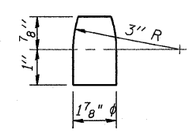

PINTLE

TYPE I BEARING DIMENSIONS

Location	We	Le	Tp	Np	Ts	Ns	Te	Tt	Wt	Lt	Sab
Piers 1, 5, & 13	14"	22"	11/16"	7	3/16"	6	5 5/16"	2 7/8"	15"	24"	14 1/4"
Piers 2, 4, 10, & 12	15"	24"	3/4"	4	3/16"	3	3 9/16"	Varies	16"	26"	15 1/4"
Pier 8 (Girders 1-6)	17"	28"	7/8"	4	1/4"	3	4 1/4"	2 7/8"	18"	30"	17 7/8"
Pier 8 (Girders 7-12)	19"	32"	1"	4	1/4"	3	4 3/4"	3 1/4"	20"	34"	19 7/8"

BEARING SEAT ELEVATIONS

Girder No.	S. Abut.	Pier 1	Pier 2	Pier 3	Pier 4	Pier 5	Pier 6-S	Pier 6-N	Pier 7	Pier 8	Pier 9-S	Pier 9-N	Pier 10	Pier 11	Pier 12	Pier 13	N. Abut.
1	657.56	659.70	663.24	666.85	669.89	672.30	673.55	671.73	673.80	673.30	672.04	673.80	671.99	669.19	665.23	661.29	659.50
2	657.73	659.87	663.41	667.02	670.06	672.47	673.72	671.90	673.94	673.52	672.21	673.97	672.16	669.36	665.40	661.46	659.67
3	657.90	660.04	663.58	667.19	670.23	672.64	673.89	672.07	674.09	673.73	672.38	674.14	672.33	669.53	665.57	661.63	659.84
4	658.07	660.21	663.75	667.36	670.40	672.81	674.06	672.24	674.23	673.94	672.55	674.31	672.50	669.70	665.74	661.80	660.01
5	658.24	660.38	663.92	667.53	670.57	672.98	674.23	672.41	674.37	674.15	672.72	674.48	672.67	669.87	665.91	661.97	660.18
6	658.41	660.55	664.09	667.70	670.74	673.15	674.40	672.58	674.50	674.36	672.89	674.65	672.84	670.04	666.08	662.14	660.35
7	658.41	660.55	664.09	667.70	670.74	673.15	674.40	672.66	674.47	674.32	672.80	674.65	672.84	670.04	666.08	662.14	660.35
8	658.24	660.38	663.92	667.53	670.57	672.98	674.23	672.49	674.26	674.18	672.63	674.48	672.67	669.87	665.91	661.97	660.18
9	658.07	660.21	663.75	667.36	670.40	672.81	674.06	672.32	674.05	674.04	672.46	674.31	672.50	669.70	665.74	661.80	660.01
10	657.90	660.04	663.58	667.19	670.23	672.64	673.89	672.15	673.83	673.89	672.29	674.14	672.33	669.53	665.57	661.63	659.84
11	657.73	659.87	663.41	667.02	670.06	672.47	673.72	671.98	673.62	673.75	672.12	673.97	672.16	669.36	665.40	661.46	659.67
12	657.56	659.70	663.24	666.85	669.89	672.30	673.55	671.81	673.40	673.58	671.95	673.80	671.99	669.19	665.23	661.29	659.50

BILL OF MATERIAL

Item	Unit	Total
Elastomeric Bearing Assembly Type I	Each	96
Anchor Bolts 1"	Each	168
Anchor Bolts 1 1/2"	Each	96

REVISIONS	
NAME	DATE

EARTH TECH | AECOM

ILLINOIS DEPARTMENT OF TRANSPORTATION

BEARING DETAILS I

FAP 330 US 12/45 (MANNHEIM RD.) OVER SOO LINE RR & FRANKLIN AVE.
STRUCTURE NO. 016-2815

SECTION 465 VB-R-1 COOK COUNTY
STA. 183+33.30 DRAWN BY JHR
DATE 7/2009 CHECKED BY CLS

7/8/2009 $FILES$