STATE OF ILLINOIS
DEPARTMENT OF TRANSPORTATION

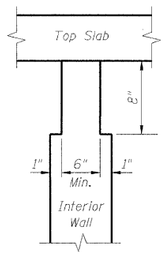


## PHOEBE NESTING SITE NOTCH DETAIL

NOTE: Notch formed by rough-finished board attached to and removed with formwork.

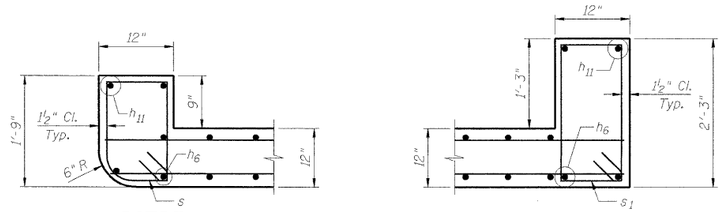


UPSTREAM DOWNSTREAM

## HEADWALL DETAILS

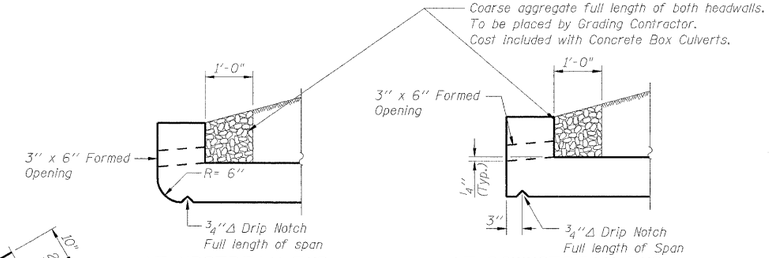


AT UPSTREAM END AT DOWNSTREAM END

## DRAIN DETAIL

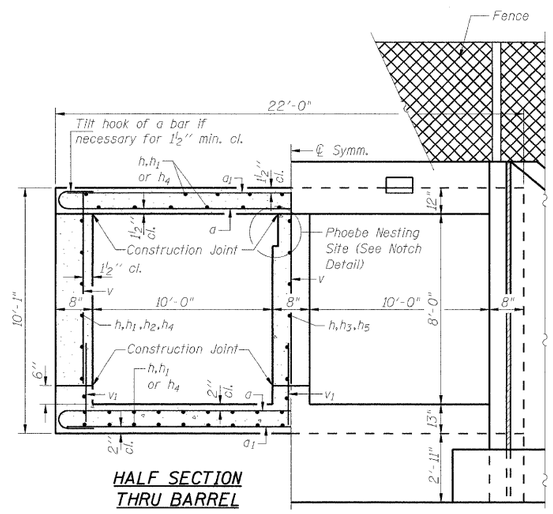


HALF SECTION THRU BARREL

HALF END ELEVATION

SECTION B-B

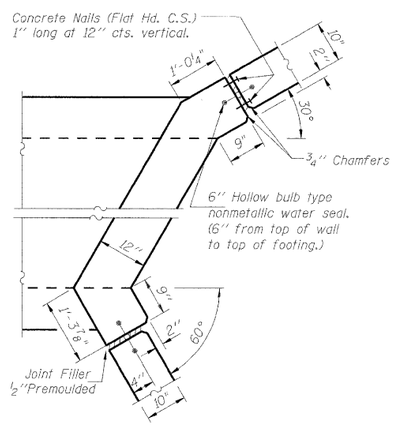


CORNER DETAIL

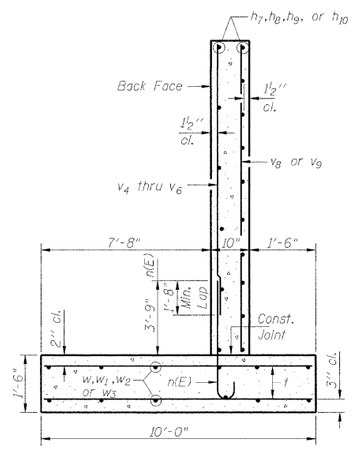


SECTION A-A
(Maximum Applied Bearing Pressure = 1,700 psf

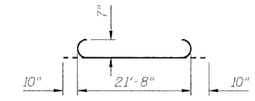


BAR a

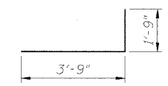


BAR d

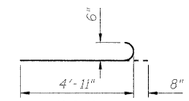


BAR n

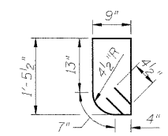


BAR s

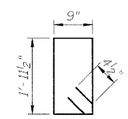


BAR $s_1$

STATION 348+44.50
BUILT 200_ BY
STATE OF ILLINOIS
F.A.P. RT. 305
SEC. NO. 0913.1-T
LOADING HS20
STR. NO. 016-7947

NAME PLATE
(See Std. 515001)

## BILL OF MATERIAL

| Bar | No. | Size | Length | Shape |
|---|---|---|---|---|
| a | 688 | #7 | 23'-4" | |
| $a_1$ | 688 | #7 | 21'-8" | |
| | | | | |
| d | 80 | #4 | 5'-6" | |
| | | | | |
| h | 468 | #6 | 26'-0" | |
| $h_1$ | 296 | #6 | 31'-1" | |
| $h_2$ | 16 | #6 | 25'-2" | |
| $h_3$ | 16 | #6 | 28'-1" | |
| $h_4$ | 420 | #6 | 22'-4" | |
| $h_5$ | 24 | #6 | 20'-5" | |
| $h_6$ | 8 | #6 | 25'-2" | |
| $h_7$ | 29 | #4 | 10'-2" | |
| $h_8$ | 29 | #4 | 17'-11" | |
| $h_9$ | 17 | #4 | 9'-8" | |
| $h_{10}$ | 17 | #4 | 16'-11" | |
| $h_{11}$ | 10 | #6 | 24'-7" | |
| | | | | |
| n(E) | 71 | #6 | 5'-7" | |
| | | | | |
| s | 24 | #4 | 4'-10" | |
| $s_1$ | 24 | #4 | 6'-2" | |
| | | | | |
| t | 128 | #5 | 9'-9" | |
| | | | | |
| v | 750 | #4 | 8'-2" | |
| $v_1$ | 750 | #4 | 2'-7" | |
| $v_2$ | 8 | #4 | 8'-11" | |
| $v_3$ | 8 | #4 | 5'-11" | |
| $v_4$ | 28 | #4 | 10'-4" | |
| $v_5$ | 40 | #4 | 8'-3" | |
| $v_6$ | 11 | #4 | 6'-3" | |
| $v_7$ | 16 | #4 | 9'-10" | |
| $v_8$ | 10 | #4 | 12'-4" | |
| $v_9$ | 8 | #4 | 11'-10" | |
| $v_{10}$ | 16 | #4 | 5'-9" | |
| $v_{11}$ | 16 | #4 | 3'-6" | |
| | | | | |
| w | 16 | #5 | 10'-2" | |
| $w_1$ | 16 | #5 | 17'-11" | |
| $w_2$ | 16 | #5 | 16'-11" | |
| $w_3$ | 16 | #5 | 9'-8" | |

| Item | Unit | Quantity |
|---|---|---|
| Concrete Box Culverts | Cu. Yd. | 481.3 |
| Reinforcement Bars | Pound | 121,950 |
| Reinforcement Bars, Epoxy Coated | Pound | 600 |

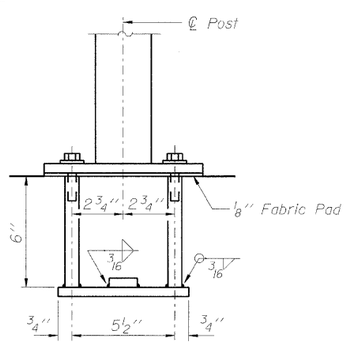


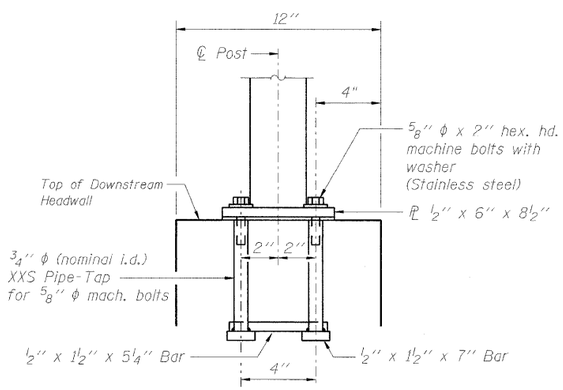


## CHAIN LINK FENCE CONNECTION TO HEADWALL DETAILS

See IDOT Highway Standard 664001-02

In lieu of the cast-in-place anchor device shown, the Contractor has the option of drilling and epoxy grouting ⅝" ϕ anchor rods. Embedment shall be according to the manufacturer's specifications.

Space reinforcement to miss anchor rods.

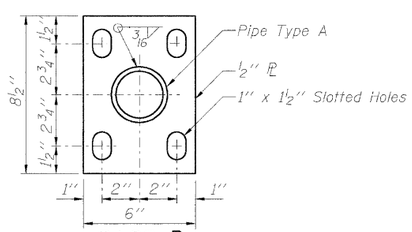


BASE PL

CULVERT SECTIONS & DETAILS
PALATINE ROAD OVER McDONALD CREEK
SECTION 0913.1-T
COOK COUNTY
STA. 348+44.50
STRUCTURE NO. 016-7947

| SHEET NO. 5 OF 8 SHEETS | F.A.P. RTE. | SECTION | COUNTY | TOTAL SHEETS | SHEET NO. |
|---|---|---|---|---|---|
| | 305 | 0913.1-T | COOK | 39 | 30 |
| | | SN 016-7947 | CONTRACT NO. 60E53 | | |
| | FED. ROAD DIST. NO. 7 | ILLINOIS | FED. AID PROJECT | | |


ZROKA engineering
Zroka Engineering, P.C.
4216 North Hermitage
Chicago, IL 60613


Date: 02-20-09 Drawn By: SW Checked By: HT

6/29/2009 5:33:08 PM G:\proj\ech\2082305\Subconsultant\Zroka\60E53-005-Details.dgn