F.A.U. RTE.	SECTION	COUNTY	TOTAL SHEETS	SHEET NO.
2578	532B-1	DUPAGE	117	59
FED. ROAD DIST. NO. 7	ILLINOIS	FED. AID PROJECT		

CONTRACT NO. 62881

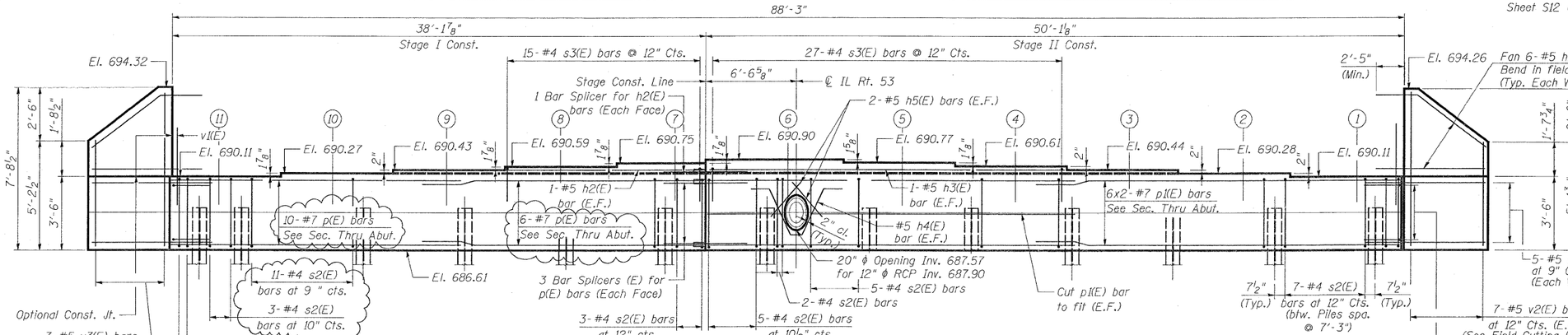

ELEVATION SOUTH ABUTMENT

(Looking South perpendicular to skew)

88'-3" Abutment Out to Out

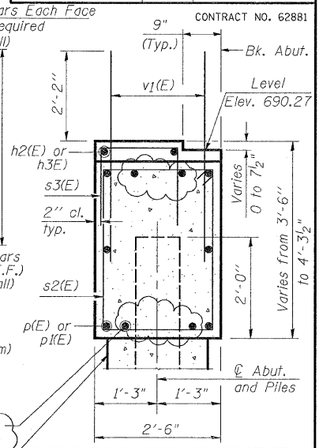

SECTION THRU ABUTMENT

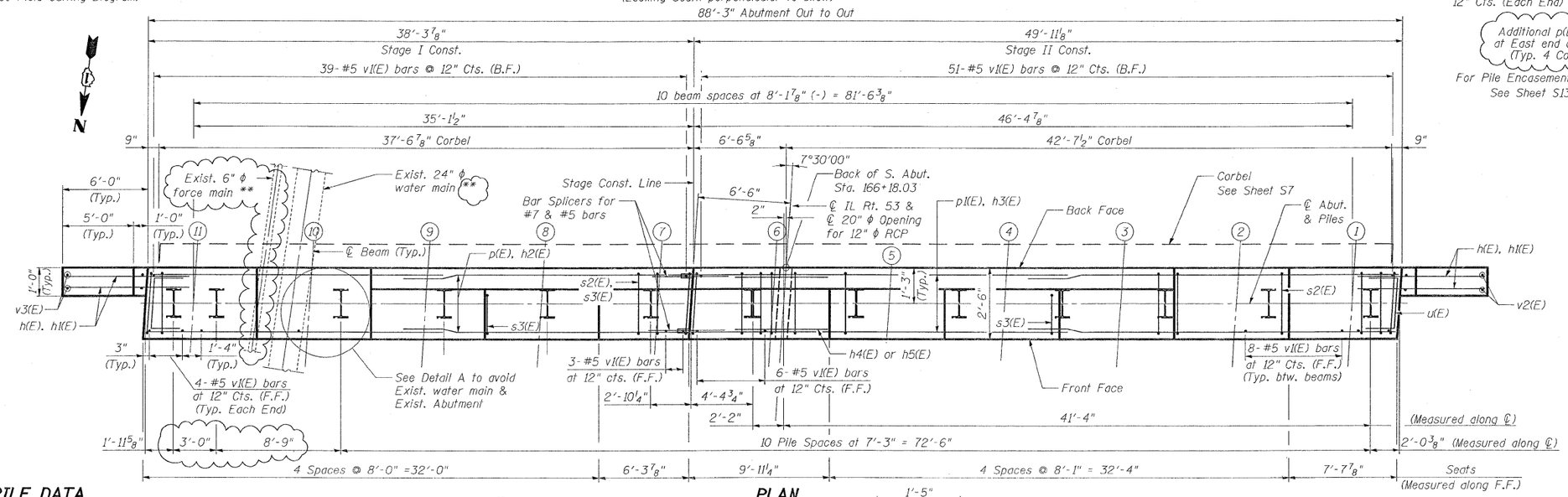

PLAN

BILL OF MATERIAL

Bar	No.	Size	Length	Shape
h(E)	20	# 5	7'- 8"	
h1(E)	24	# 5	8'- 7"	
h2(E)	2	# 5	13'- 11"	
h3(E)	2	# 5	25'- 3"	
h4(E)	2	# 5	9'- 6"	
h5(E)	4	# 5	3'- 0"	
p(E)	16	# 7	20'- 4"	
p1(E)	12	# 7	26'- 4"	
s2(E)	89	# 4	11'- 5"	
s3(E)	42	# 4	5'- 5"	
u(E)	8	# 6	6'- 2"	
v1(E)	179	# 5	4'- 4"	
v2(E)	7	# 5	12'- 1"	
v3(E)	7	# 5	12'- 2"	
* Porous Granular Embankment, Special			Cu. Yd.	118
Structure Excavation			Cu. Yd.	92
Concrete Structures			Cu. Yd.	33.8
Reinforcement Bars, Epoxy Coated			Pound	3,690
Furnishing Steel Piles HP12x53			Foot	744
Driving Piles			Foot	744
Test Piles Steel HP12x53			Each	1
Bar Splicers			Each	8
Pile Shoes			Each	12

* See Special Provisions

PILE DATA

Type: Steel HP 12x53 with Pile Shoes
Nominal Required Bearing: 419 kips
Allowable Resistance Available: 128 kips
Est. Length: 62 ft
No. Production Piles: 12
No. Test Piles: 1

** Water main & force main shall be exposed before driving piles.

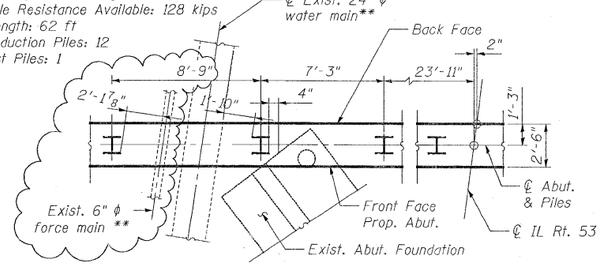

DETAIL A

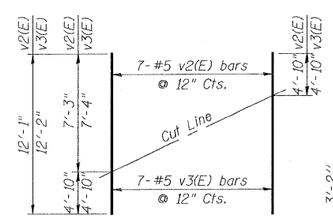

FIELD CUTTING DIAGRAM

Order v2(E) & v3(E) full length. Cut as shown and use remainder of bars in opposite face.

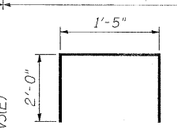

BAR s3(E)

BAR SIZE	MIN. LAP SPLICE
#4	1'-4"
#5	1'-8"
#6	2'-0"
#7	2'-9"

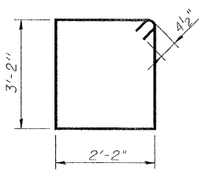

BAR s2(E)

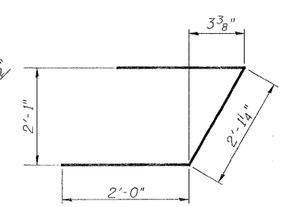

BAR u(E)

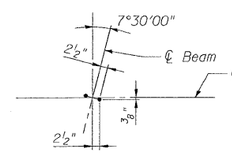

ANCHOR BOLT DETAIL

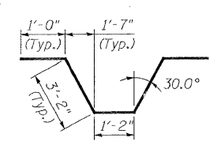

BAR h4(E)

NOTES:

1. Pour steps monolithically with cap.
2. For Bar Splicer Details see sheet S15.

REVISIONS	
NAME	DATE
R. DiGiulio	10/8/09

Rev. 10-14-09

ILLINOIS DEPARTMENT OF TRANSPORTATION

SOUTH ABUTMENT
ILLINOIS ROUTE 53 OVER
SPRING BROOK CREEK
FAU 2578 SECTION 532B-1
STRUCTURE NO. 022-0189
DUPAGE COUNTY STATION 166+46.79

SCALE: NONE DRAWN BY: M.T / E.M.
DATE: 6/12/09 CHECKED BY: A. YARGICOGLU

PATRICK ENGINEERING INC.
LISLE, ILLINOIS

Q:\IDOT\9356_AO_IL531\SpringBrook\Drawings\STRUCT\V2_Sabut.dgn
6/9/2009 3:09:23 PM
©/yar\DiGoglu\Rdw2_Lisle3