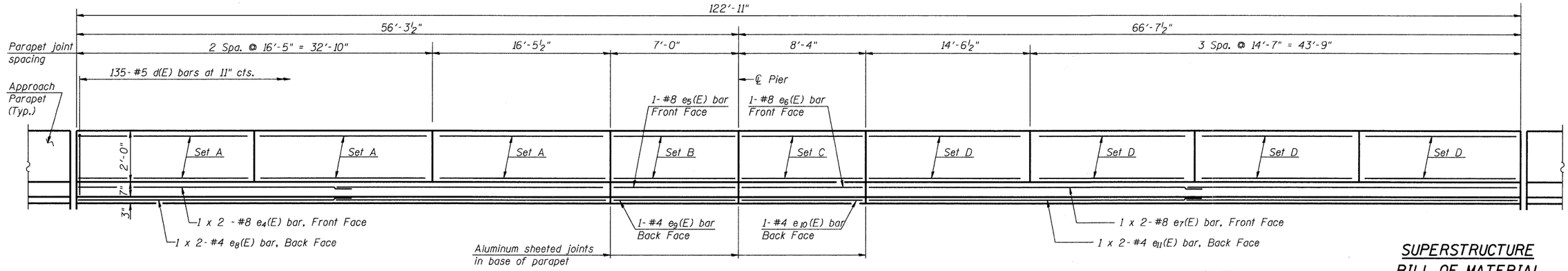

INSIDE ELEVATION OF PARAPET

(North Parapet Shown, South Parapet similar)

N.T.S.

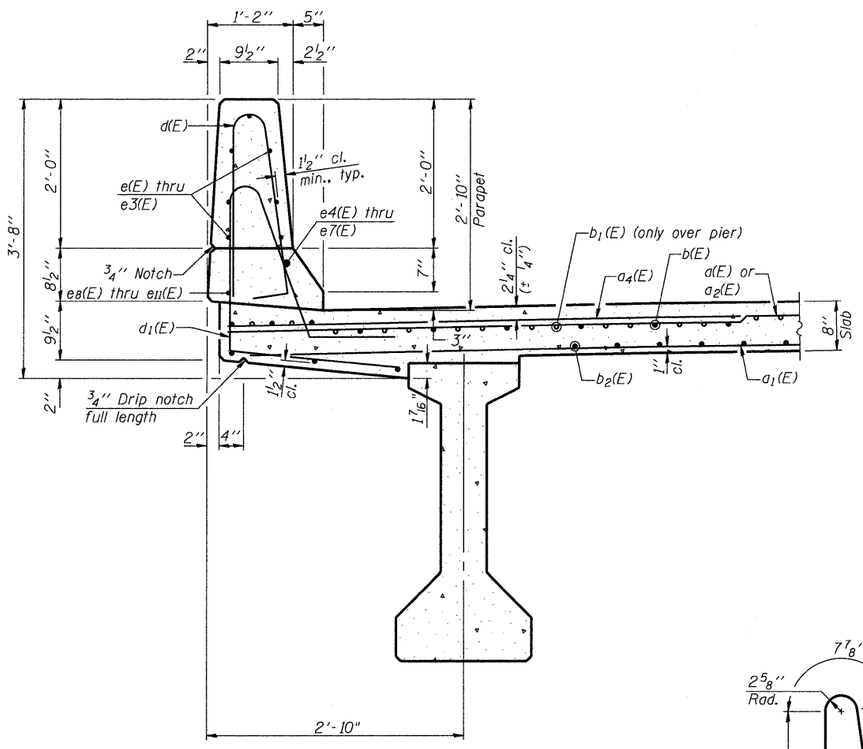

SECTION THRU PARAPET

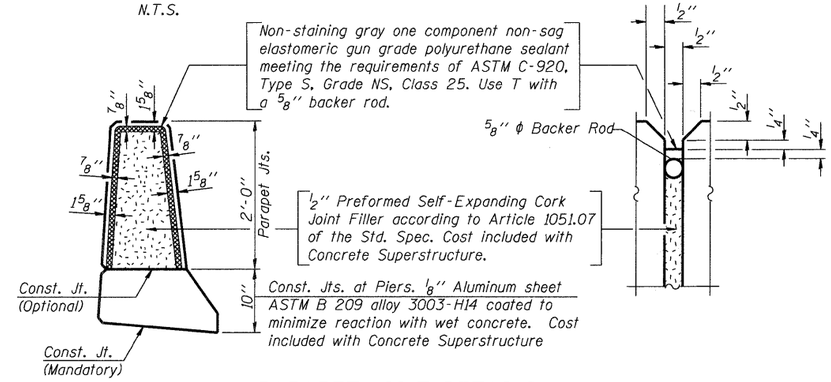

PARAPET JOINT DETAILS

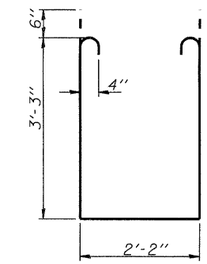

BAR s1(E)

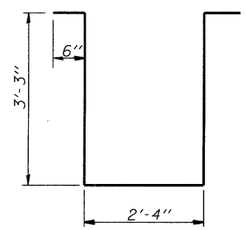

BAR s2(E)

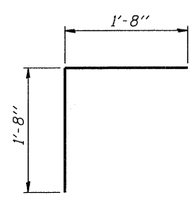

BAR v(E)

MINIMUM BAR LAP

#4 bar = 1'-8"
#5 bar = 2'-2"
#6 bar = 2'-7"
#8 bar = 4'-6"

SUPERSTRUCTURE BILL OF MATERIAL

Bar	No.	Size	Length	Shape
a(E)	225	#5	25'-6"	
a1(E)	270	#5	22'-4"	
a2(E)	225	#5	19'-3"	
a3(E)	8	#5	22'-11"	
a4(E)	492	#6	6'-0"	
b(E)	230	#5	26'-3"	
b1(E)	82	#7	32'-0"	
b2(E)	252	#5	22'-3"	
d(E)	270	#5	5'-7"	
d1(E)	270	#5	7'-8"	
e(E)	42	#4	16'-1"	
e1(E)	14	#4	6'-8"	
e2(E)	14	#4	8'-0"	
e3(E)	56	#4	14'-3"	
e4(E)	4	#8	26'-9"	
e5(E)	2	#8	6'-8"	
e6(E)	2	#8	8'-0"	
e7(E)	4	#8	31'-3"	
e8(E)	4	#4	25'-4"	
e9(E)	2	#4	6'-8"	
e10(E)	2	#4	8'-0"	
e11(E)	4	#4	29'-10"	
m(E)	8	#6	23'-5"	
m1(E)	18	#6	16'-6"	
m2(E)	28	#6	9'-1"	
m3(E)	24	#6	4'-6"	
m4(E)	4	#6	1'-8"	
m5(E)	24	#4	5'-6"	
m6(E)	7	#8	5'-6"	
s(E)	84	#5	6'-9"	
s1(E)	72	#4	9'-8"	
s2(E)	30	#4	9'-10"	
v(E)	84	#5	3'-4"	
Reinforcement Bars, Epoxy Coated			Pound	47,660
Concrete Superstructure			Cu. Yd.	200.9
Bar Splicers (E)			Each	84
Protective Coat			Sq. Yd.	650
Bridge Deck Grooving			Sq. Yd.	519

Bars indicated thus 1 x 6-#5 etc. indicates 1 line of bars with 6 lengths per line.

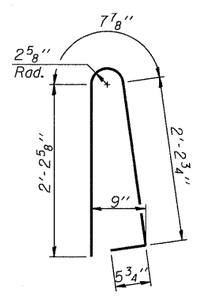

BAR d(E)

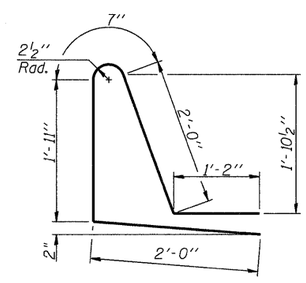

BAR d1(E)

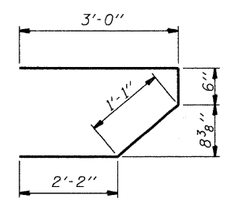

BAR s(E)

Set A (6 location)
7-#4 e(E) bars
(See section thru parapet)

Set B (2 location)
7-#4 e1(E) bars
(See section thru parapet)

Set C (2 location)
7-#4 e2(E) bars
(See section thru parapet)

Set D (8 location)
7-#4 e3(E) bars
(See section thru parapet)

Sheet No. S-10 of 23

AECOM	USER NAME = dobezicd PLOT SCALE = 01 ':' / IN. PLOT DATE = 5/28/2009	DESIGNED - DD DRAWN - DD CHECKED - ATB DATE - 3/18/2009	REVISED - REVISED - REVISED - REVISED -

MCHENRY COUNTY
DIVISION OF TRANSPORTATION

SUPERSTRUCTURE DETAILS III
STRUCTURE NO. 056-3177

SCALE: | SHEET NO. 3 OF 3 SHEETS | STA. | TO STA.

F.A.S. RTE.	SECTION	COUNTY	TOTAL SHEETS	SHEET NO.
0031	06-00323-00-BR	MCHENRY	53	29

CONTRACT NO. 63218

FED. ROAD DIST. NO. 1 | ILLINOIS | FED. AID PROJECT

FILE NAME = \\uschgifx207\c60895873\c60895873\900.cad\901_drawings\sheet\structure\056-3177_60895873.S10_Superstructure_Details_3.sht