ROUTE NO.	SEC.	COUNTY	TOTAL SHEETS	SHEET NO.
FAI 74	*	HENRY	149	107
FED. ROAD DIST. NO. 7	ILLINOIS	PROJECT		

*(37-3)RS-1,(37-4)RS & 37-4B-D

SHEET NO. 4
6 SHEETS

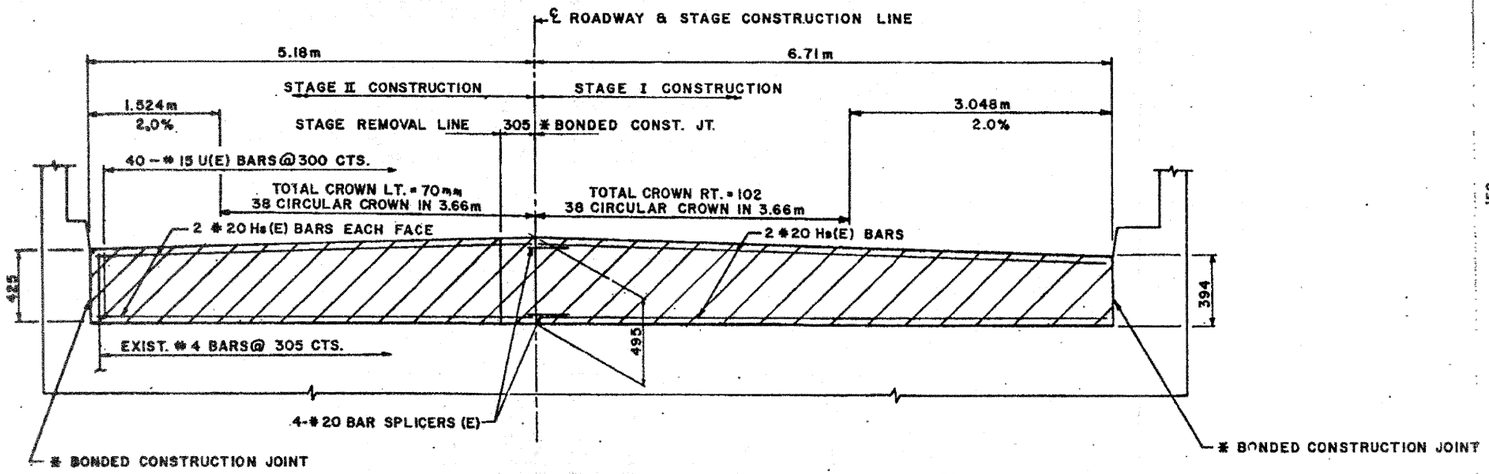

ABUTMENT ELEVATION

SB FACING SOUTH
NB FACING NORTH

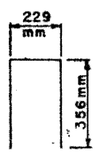

#5 U(E) BAR

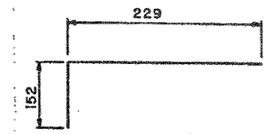

BAR D(E)

EXISTING BRIDGE PLANS
FOR REFERENCE ONLY

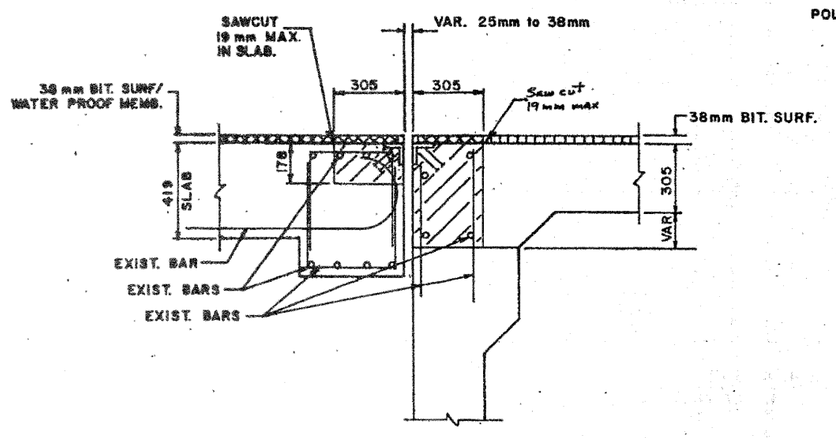

TYPICAL SECTION THRU EXIST. ABUTMENT

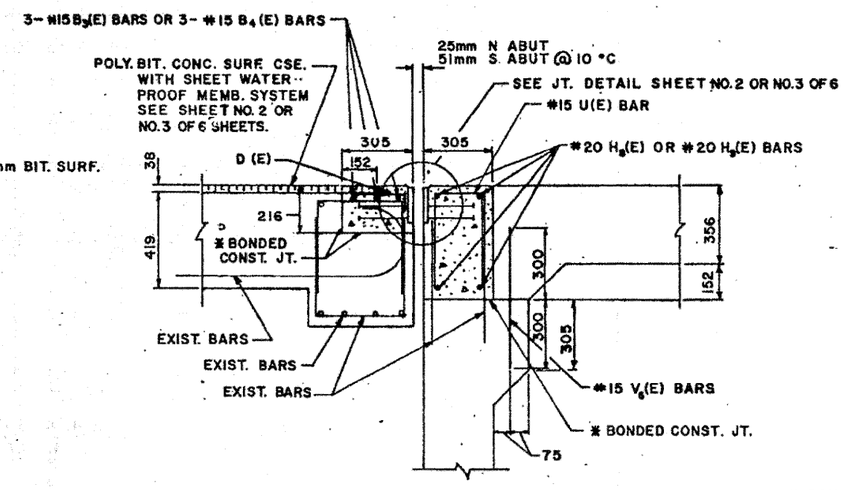

TYPICAL SECTION THRU PROP. ABUTMENT

BILL OF MATERIAL - 4 ABUTMENTS

BAR	No.	SIZE	LENGTH	SHAPE
H_s(E)	16	#20	5.10	
H_s(E)	16	#20	6.63	
U(E)	160	#15	0.94	

ITEM	UNIT	QUANTITY
CONCRETE REMOVAL	Cu. M.	6.10
CONCRETE STRUCTURES	Cu. M.	6.85
REINFORCEMENT BARS, EPOXY CTD.	Kg.	679
STRUCTURAL STEEL	Kg.	1390.1

* BONDED CONSTRUCTION JOINT IN ACCORDANCE WITH ART. 503.09(a)(2) OF THE STANDARD SPECIFICATIONS.

REVISED 11-20-97

SN 037-0015 & 0016
DISTRICT NO. 2 DIXON
DESIGNED D. PAUSER
DRAWN D. LINK DATE 8/97
CHECKED SCALE

FILE NAME = c:\pw_work\PWIDOT\PERKINSDR\dms36777\d208298-sht-details.dgn	USER NAME = perkinsdr	DESIGNED -	REVISED -
		DRAWN -	REVISED -
	PLOT SCALE = 50.0000 ' / IN.	CHECKED -	REVISED -
	PLOT DATE = Wed Aug 05 07:35:12 2009	DATE -	REVISED -

STATE OF ILLINOIS
DEPARTMENT OF TRANSPORTATION

EXISTING BRIDGE PLANS
(FOR REFERENCE ONLY)

SCALE: SHEET NO. SHEETS STA. TO STA.

F.A.I. RTE.	SECTION	COUNTY	TOTAL SHEETS	SHEET NO.
74	37-(4HB,4HB-1,4HB-2)D	HENRY	148	124
		CONTRACT NO. 64264		
	ILLINOIS	FED. AID PROJECT		