STATE OF ILLINOIS
DEPARTMENT OF TRANSPORTATION

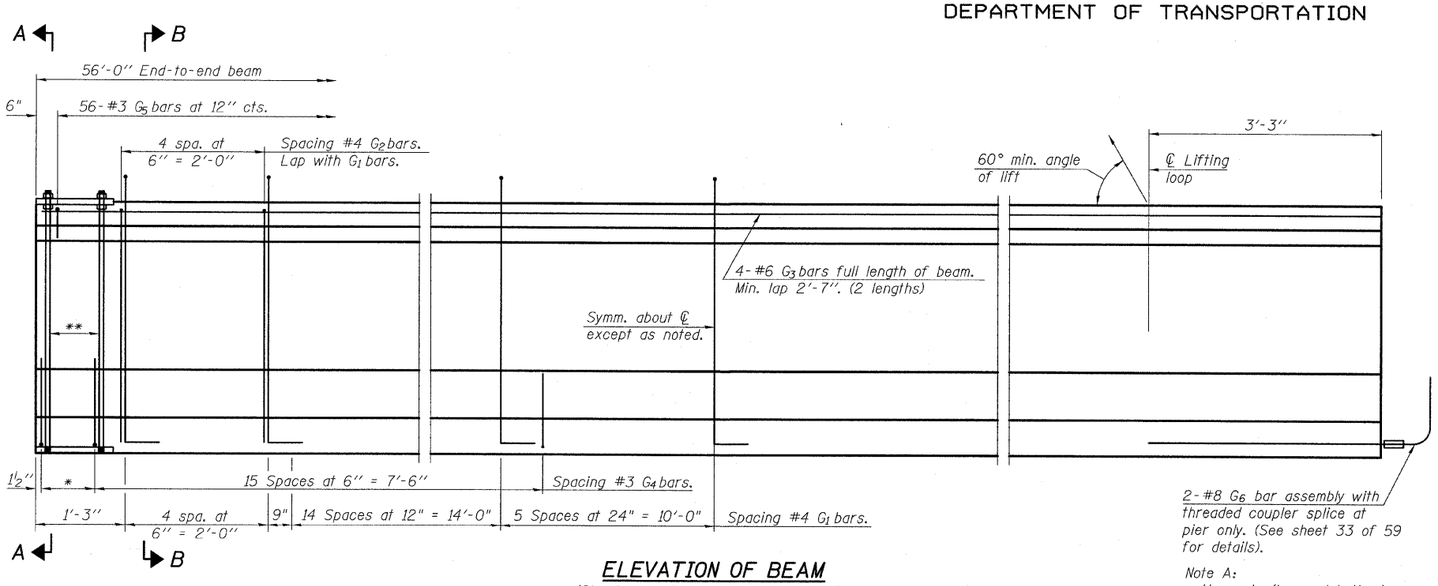

*3 spaces at 3" = 9".
**4-¾" ϕ threaded dowel rods at 3" cts., Each Face.

Note A:
Hex nuts (top and bottom) with lock washers (top). Only tighten sufficiently to compress lock washers.

ELEVATION OF BEAM
(Showing reinforcement & dimensions)

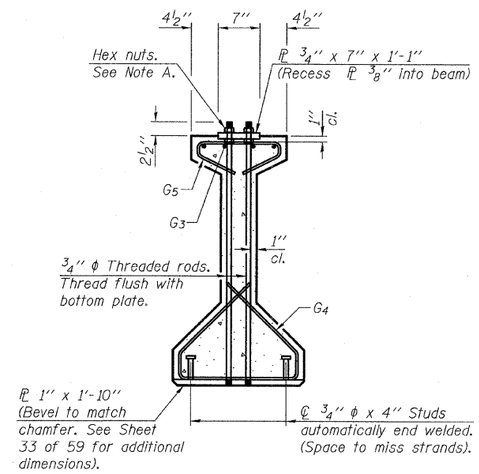

SECTION A-A

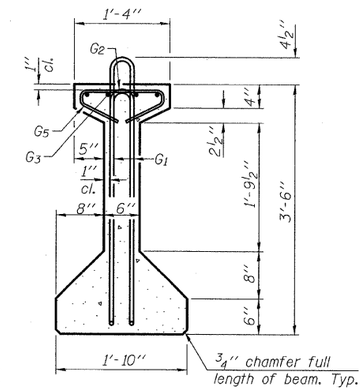

SECTION B-B

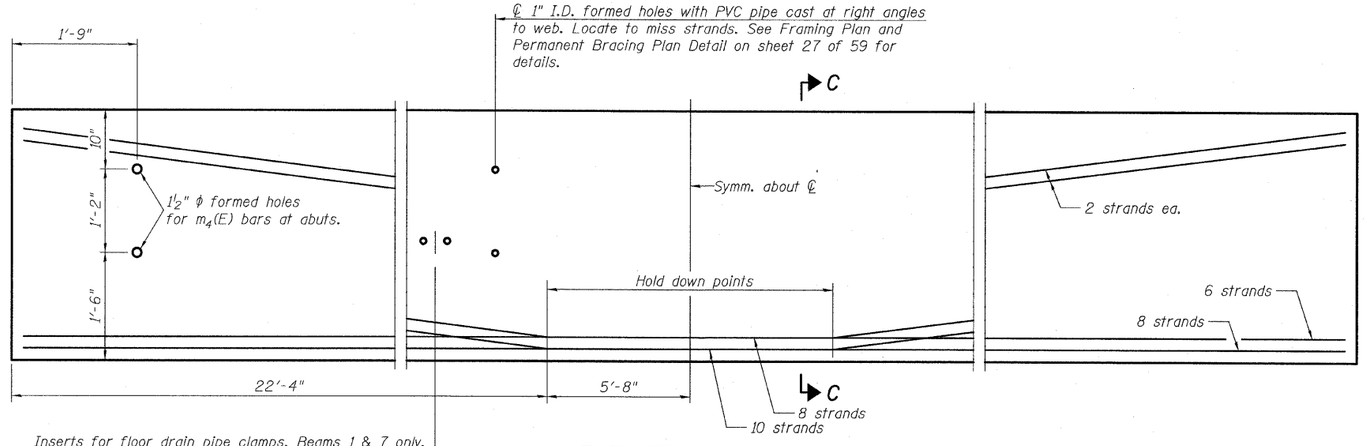

Inserts for floor drain pipe clamps. Beams 1 & 7 only, locate to miss strands. See sheet 14 of 59 for drain locations.

ELEVATION OF BEAM
(Showing prestressing steel)

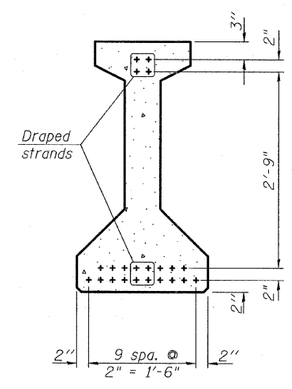

SECTION C-C

***BAR LIST
ONE BEAM ONLY

Bar	No.	Size	Length	Shape
G_1	49	#4	8'-5"	
G_2	10	#4	6'-8"	
G_3	8	#6	29'-3"	
G_4	38	#3	4'-11"	
G_5	56	#3	2'-6"	
G_6	2	#8	6'-6"	

***For information only

Notes:
See sheet 33 of 59 for additional details and Bill of Material.
Required release strength, f'ci, shall be 5,000 psi.

42" PPC I-BEAM (SPAN 5)
STRUCTURE NO. 006-0170 EB

DESIGNED -	PK
CHECKED -	PDF SP
DRAWN -	PK
CHECKED -	PDF

TYLIN INTERNATIONAL

SHEET NO. 32	F.A. RTE.	SECTION	COUNTY	TOTAL SHEETS	SHEET NO.
59 SHEETS	80	*	BUREAU	344	126
			CONTRACT NO. 66908		
	FED. ROAD DIST. NO.	ILLINOIS	FED. AID PROJECT		

*06-17BR & BR-1,7VB-M, 6BR & 6, 7 RS-1 & 11