Notes:
Pour steps monolithically with cap.

STATE OF ILLINOIS
DEPARTMENT OF TRANSPORTATION

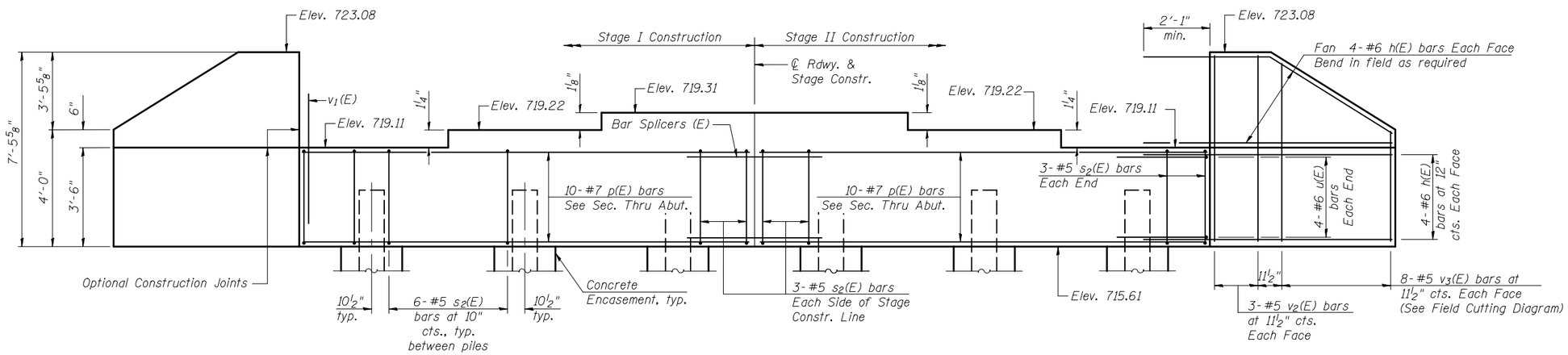


## ELEVATION
(Looking Southwest)

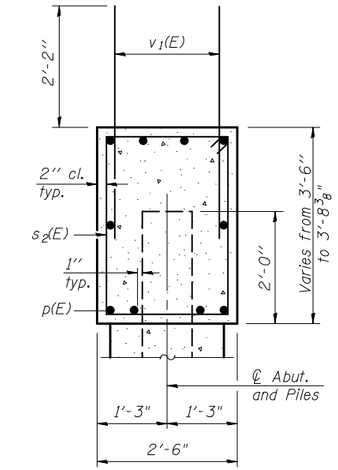


## SEC. THRU ABUT.

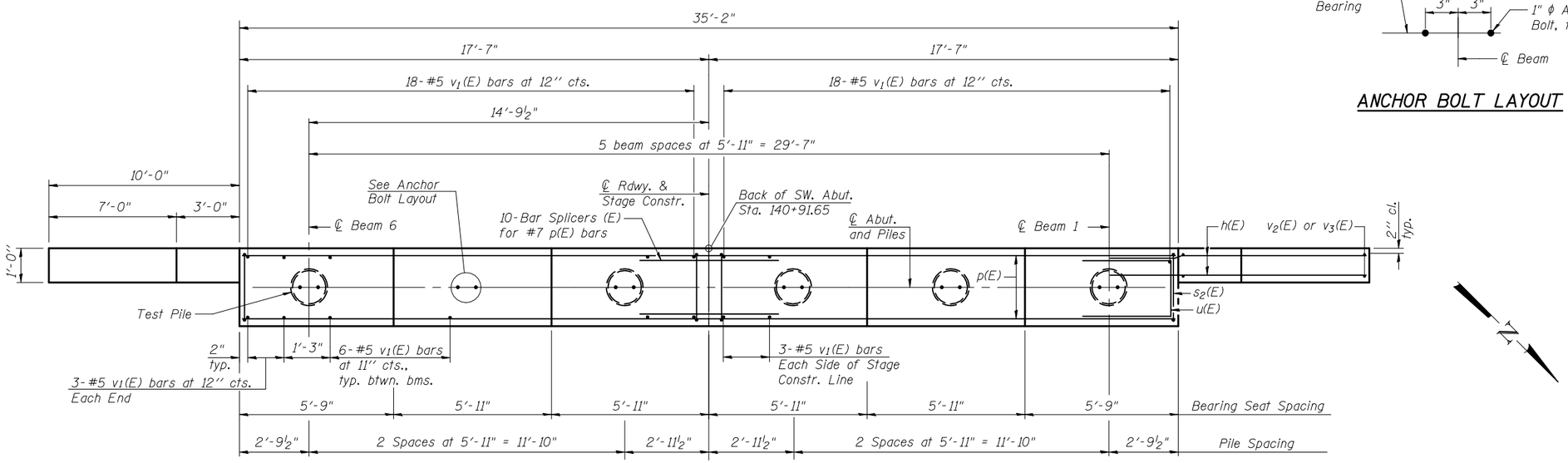


## PLAN

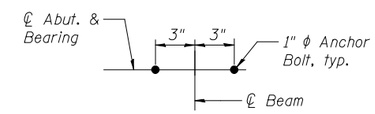


## ANCHOR BOLT LAYOUT

## BILL OF MATERIAL

| Bar | No. | Size | Length | Shape |
|---|---|---|---|---|
| h(E) | 32 | #6 | 12'-9" | |
| p(E) | 20 | #7 | 17'-3" | |
| s2(E) | 36 | #5 | 11'-6" | |
| u(E) | 8 | #6 | 7'-2" | |
| v1(E) | 72 | #5 | 4'-4" | |
| v2(E) | 12 | #5 | 7'-0" | |
| v3(E) | 16 | #5 | 10'-7" | |
| Structure Excavation | | | Cu. Yd. | 92 |
| Concrete Structures | | | Cu. Yd. | 16.4 |
| Reinforcement Bars, Epoxy Coated | | | Pound | 2,430 |
| Furnishing Metal Shell Piles 14" ϕ x 0.312" | | | Foot | 210 |
| Driving Piles | | | Foot | 210 |
| Test Pile, Metal Shell | | | Each | 1 |
| Concrete Encasement | | | Cu. Yd. | 3.3 |

For details of Bar Splicers, see sheet 20 of 22.
For details of piles and Concrete Encasement, see sheet 19 of 22.

## PILE DATA

Type: Metal Shell 14" ϕ x 0.312"
Nominal Required Bearing: 516 kips
Factored Resistance Available: 258 kips
Est. Length: 42 feet
No. Production Piles: 5
No. Test Piles: 1

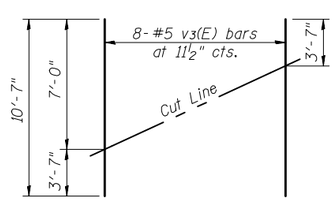


## FIELD CUTTING DIAGRAM
Order v3(E) full length. Cut as shown and use remainder of bars in opposite face.

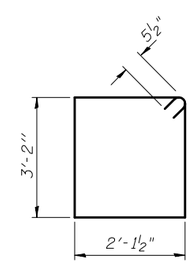


## BAR s2(E)

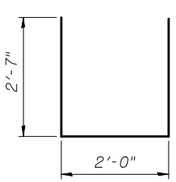


## BAR u(E)

| | |
|---|---|
| DESIGNED | SMM |
| CHECKED | KMS |
| DRAWN | SMM |
| CHECKED | MTH |

CLARK DIETZ, INC.

## SOUTHWEST ABUTMENT DETAILS
## STRUCTURE NO. 020-0064

| SHEET NO. 16 | F.A.P. RTE. | SECTION | COUNTY | TOTAL SHEETS | SHEET NO. |
|---|---|---|---|---|---|
| 22 SHEETS | 71 | (121BR)BR | DEWITT | 75 | 45 |
| | | | CONTRACT NO. 70429 | | |
| | FED. ROAD DIST. NO. 5 | ILLINOIS | FED. AID PROJECT | | |

D-95-070-04, P-95-035-04