CONTRACT NO. 70623

F.A.P. RTE.	SECTION	COUNTY	TOTAL SHEETS	SHEET NO.
808	*	**	715	283

* (205,57,105)RS-2
** CHAMPAIGN & DOUGLAS

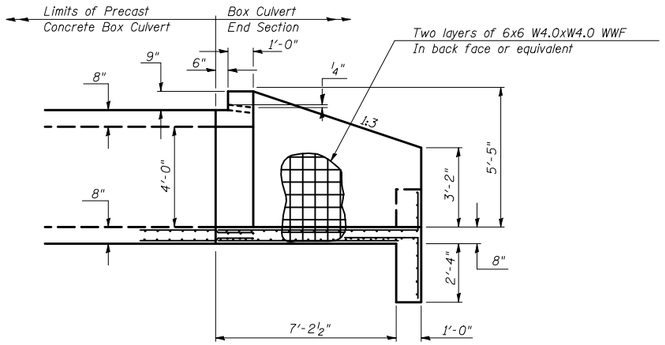

HALFSIDE ELEVATION

DOWNSTREAM END
(DIMENSIONS AT RIGHT ANGLES TO ℄ OF ROADWAY)

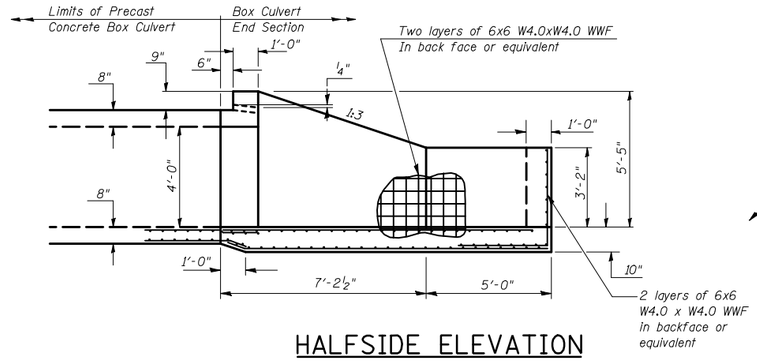

HALFSIDE ELEVATION

UPSTREAM END
(DIMENSIONS AT RIGHT ANGLES TO ℄ ROADWAY)

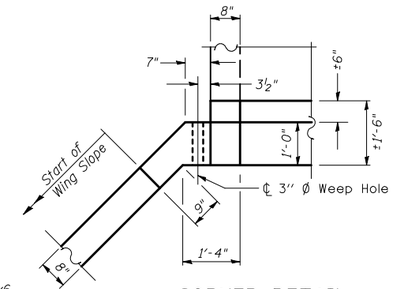

CORNER DETAIL

(Showing dimensions and weep hole)

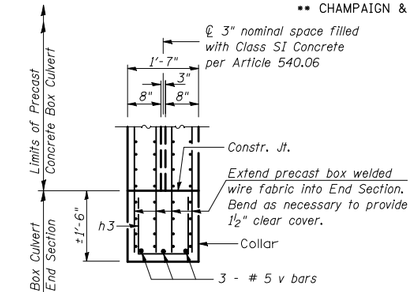

SECTION E-E

Tilt or adjust h_3 bar as necessary to fit

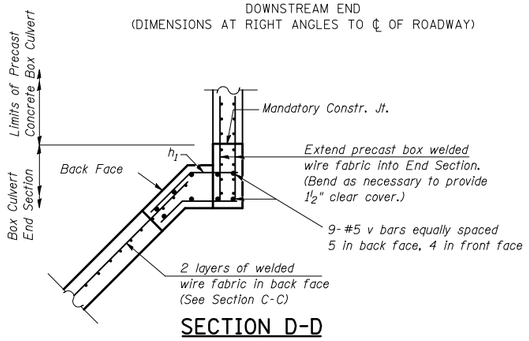

SECTION D-D

(Showing reinforcement)

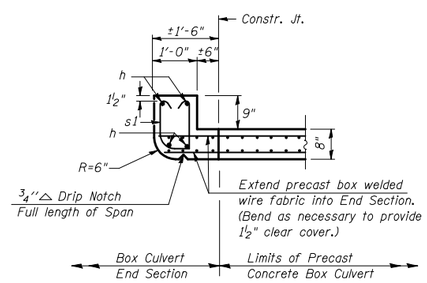

SECTION F-F

TOP SLAB / HEADWALL UPSTREAM END

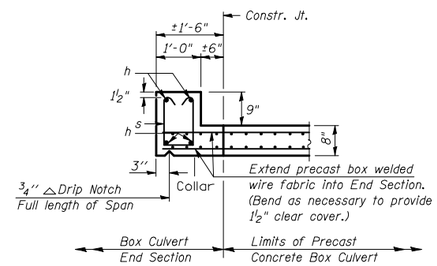

SECTION F-F

TOP SLAB / HEADWALL DOWNSTREAM END

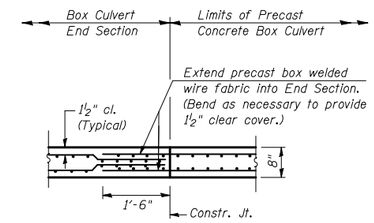

SECTION B-B

BOTTOM SLAB

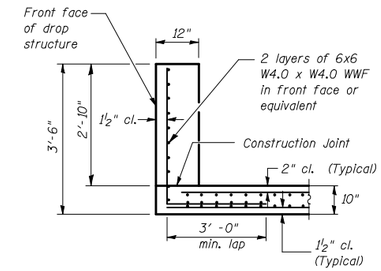

SECTION A-A

UPSTREAM END

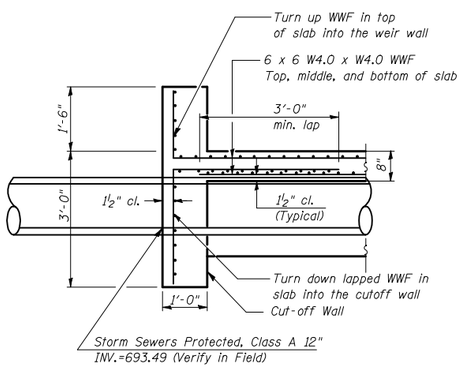

SECTION A-A

DOWNSTREAM END

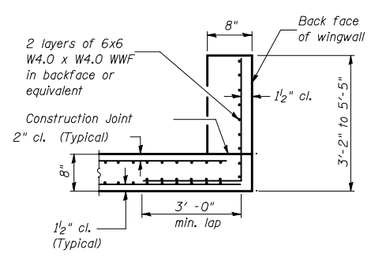

SECTION C-C

WINGWALLS AND UPSTREAM DROP BOX

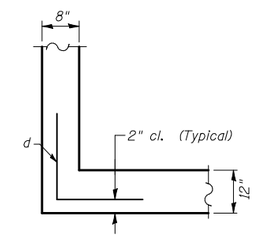

SECTION G-G

CORNER OF UPSTREAM DROP STRUCTURE

BILL OF MATERIAL (UPSTREAM END)

For Information Only
(One End Section)

Bar	No.	Size	Length	Shape
d	6	#4	4'-0"	
h	4	#6	20'-1"	
h_1	14	#4	2'-8"	
h_2	14	#4	2'-0"	
h_3	7	#4	3'-9"	
s_1	20	#4	3'-8"	
v	21	#5	5'-10"	
v_1	40	#4	1'-9"	

Item	Unit	Total
Class SI Concrete	Cu. Yd.	18.2
Reinforcement Bars	Pound	515.0
Welded Wire Fabric	Sq. Ft.	1,676.0

BILL OF MATERIAL (DOWNSTREAM END)

For Information Only
(One End Section)

Bar	No.	Size	Length	Shape
d	4	#4	4'-0"	
h	4	#6	20'-1"	
h_1	14	#4	2'-8"	
h_2	14	#4	2'-0"	
h_3	7	#4	3'-9"	
s	20	#4	3'-10"	
v	21	#5	5'-10"	

Item	Unit	Total
Class SI Concrete	Cu. Yd.	14.5
Reinforcement Bars	Pound	372.0
Welded Wire Fabric	Sq. Ft.	1,054.0

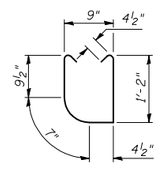

s1 BARS

UPSTREAM END

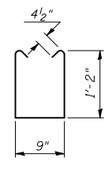

s BARS

DOWNSTREAM END

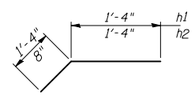

h1 & h2 BARS

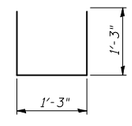

h3 BARS

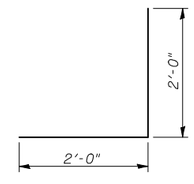

d BARS

UPSTREAM END

SHEET 3 OF 6

END SECTION DETAIL
DOUBLE 8'x4' PRECAST BOX CULVERT
F.A.P. ROUTE 808 - SECTION (205,57,105)RS-2
CHAMPAIGN COUNTY
STATION 2264+91.00, S.N. 010-8137
CULVERT NO. 13

PLOT DATE = 8/12/2009
FILE NAME = c:\pw_work\PWIDOT\CEARLDCKJD\d818145\70623-sht-culvert_details.dgn
PLOT SCALE = 42.352 (IN.
USER NAME = cearldckjd