CONTRACT NO. 70623

F.A.P. RTE.	SECTION	COUNTY	TOTAL SHEETS	SHEET NO.
808	*	**	715	316

* (205,57,105)RS-2
** CHAMPAIGN & DOUGLAS

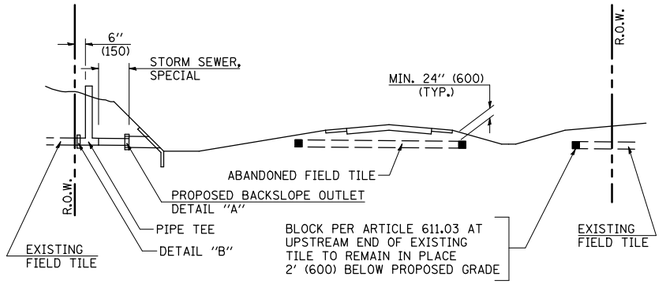

METHOD 'A' (2 LANE)

STORM SEWER FLOW LINE ABOVE PROPOSED DITCH FLOW LINE

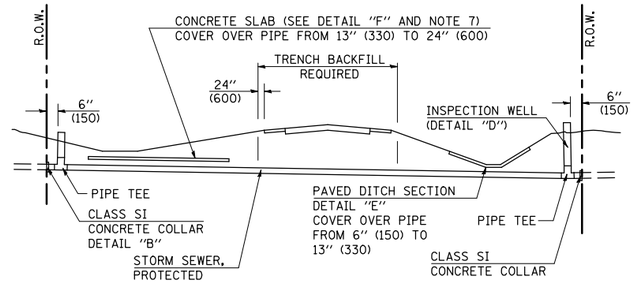

METHOD 'B' (2 LANE)

STORM SEWER LESS THAN 2' (600 mm) BELOW DITCH FLOW LINE AND STORM SEWERS CROSSING UNDER PAVEMENT AND PAVED DITCH

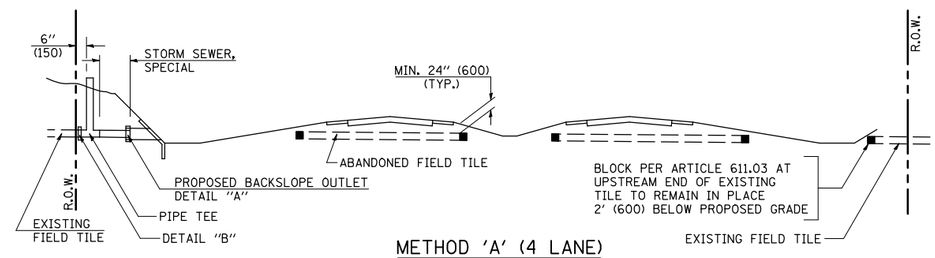

METHOD 'A' (4 LANE)

STORM SEWER FLOW LINE ABOVE PROPOSED DITCH FLOW LINE

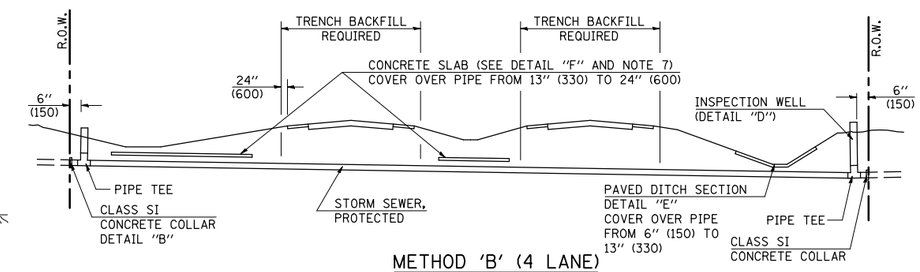

METHOD 'B' (4 LANE)

STORM SEWER LESS THAN 2' (600 mm) BELOW DITCH FLOW LINE AND STORM SEWERS CROSSING UNDER PAVEMENTS AND PAVED DITCHES

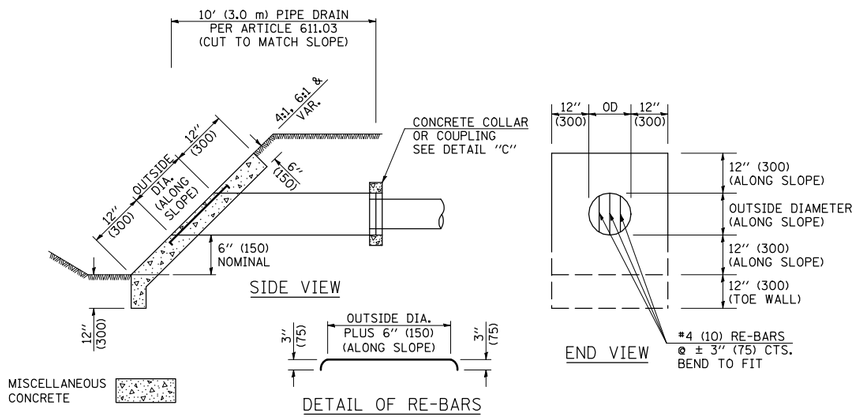

HEADWALL FOR BACKSLOPE OUTLET

DETAIL "A"

CONCRETE PIPE STANDARD SIZES	
STORM SEWER	RISER
6" (150)	6" (150)
8" (200)	6" (150)
10" (250)	8" (200)
12" (300) OR GREATER	10" (250)

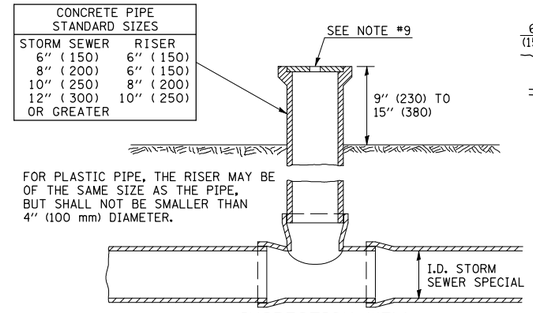

INSPECTION WELL

DETAIL "D"

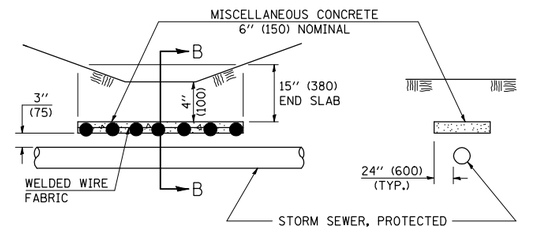

SLAB ELEVATION

SECTION B-B

CONCRETE SLAB

DETAIL "F"

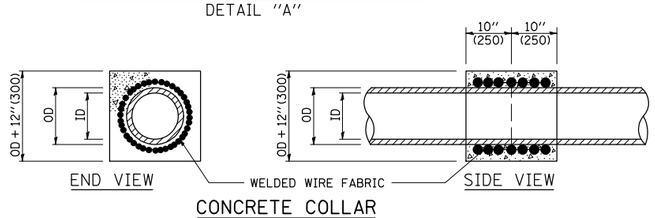

CONCRETE COLLAR

DETAIL "B"

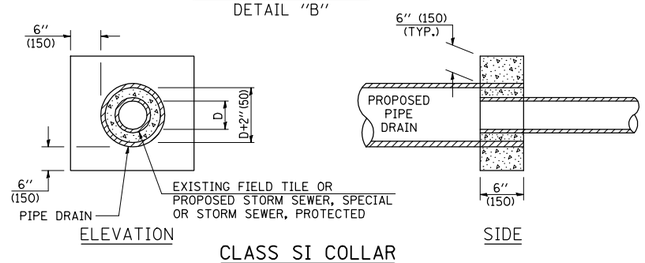

CLASS SI COLLAR

DETAIL "C"

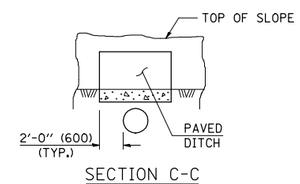

SECTION C-C

PAVED DITCH

DETAIL "E"

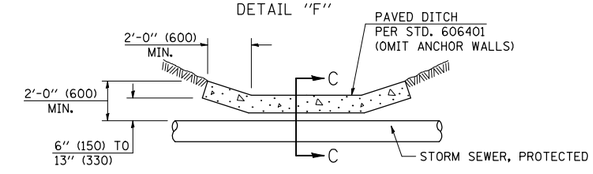

PAVED DITCH ELEVATION

GENERAL NOTES

1. EXISTING FIELD TILE ENCOUNTERED BY EXPLORATION TRENCH SHALL BE INSPECTED BY THE ENGINEER FOR UNOBSTRUCTED FLOW WITHIN THE LIMITS OF THE RIGHT-OF-WAY.
2. ONLY FIELD TILE THAT DOES NOT HAVE SATISFACTORY FLOW AND OR HAS VISIBLE SIGNS OF DETERIORATION (SINK HOLES, ETC.) SHALL BE REPLACED WITHIN THE LIMITS OF THE RIGHT-OF-WAY IN ACCORDANCE WITH METHOD "B".
3. INSPECTION WELLS SHALL BE CONSTRUCTED APPROXIMATELY 6" (150 mm) INSIDE OF BOTH RIGHT-OF-WAY LINES AT ALL FIELD TILE LOCATIONS.
4. EXISTING FIELD TILE ABANDONED UNDER EXISTING PAVEMENTS OR PAVED SHOULDERS SHALL BE FILLED WITH FLOWABLE GROUT AS DIRECTED BY THE ENGINEER. THIS WORK WILL BE PAID FOR ACCORDING TO ARTICLE 109.04.
5. NON-CIRCULAR FIELD TILE SHALL BE REPLACED WITH STORM SEWER, SPECIAL OF AT LEAST THE SAME CROSS SECTIONAL AREA. ALL EXISTING FIELD TILE SHALL BE REPLACED WITH STORM SEWER OF THE TYPE REQUIRED FOR THE MINIMUM DEPTH OF COVER.
6. THE 6" (150 mm) CONCRETE SLAB OR DITCH LINING SHALL BE POURED THE LENGTH OF THE TRENCH AT ALL DITCH FLOW LINE LOCATIONS WITHIN THE RIGHT-OF-WAY WITH LESS THAN 2' (600 mm) OF EARTH COVER. MISCELLANEOUS CONCRETE SHALL BE USED ACCORDING TO SECTION 611.
7. ALL MISCELLANEOUS SLABS, APRONS AND DITCH LININGS SHALL BE REINFORCED WITH WELDED WIRE FABRIC AS SHOWN FOR PAVED DITCH IN STANDARD 606401.
8. HEADWALL FOR BACKSLOPE OUTLET MAY BE USED FOR PIPE DRAIN DIAMETERS UP TO 10" (250 mm). SPECIAL DESIGNS WILL BE REQUIRED FOR LARGER SIZES.
9. THE INSPECTION WELL LID FOR P.C.C. PIPE SHALL BE CONSTRUCTED OF 3/8" (10 mm) CAST IRON AND PROVIDED WITH A 1" (25 mm) DIAMETER HOLE IN CENTER. THE LID FOR THE OTHER PIPE MATERIALS SHALL BE A GRATE ASSEMBLY PREFABRICATED FOR AND COMPATIBLE WITH THE PIPE SYSTEM.

Note: All dimensions are in INCHES (millimeters) unless otherwise shown.

DATE	REVISIONS	NAME
11/06	REPLACED DETAIL A-18.02	TJB

ILLINOIS DEPARTMENT OF TRANSPORTATION

FIELD TILE SYSTEMS (TREATMENT OF EXISTING)

DISTRICT 5 DETAIL NO. 61101011A

PLOT DATE = 8/12/2009
FILE NAME = c:\pw_work\PWIDOT\CEARLOCKJD\d0101445\70623-sht-details.dgn
PLOT SCALE = 42.253' / IN.
USER NAME = cearlockjd