CONTRACT NO. 70623

F.A.P. RTE.	SECTION	COUNTY	TOTAL SHEETS	SHEET NO.
808	*	**	715	383

STA. 1066+20.00 TO STA. 1067+00.00

FED. ROAD DIST. NO. | ILLINOIS | FED. AID PROJECT

* (205,57,105)RS-2
** CHAMPAIGN & DOUGLAS

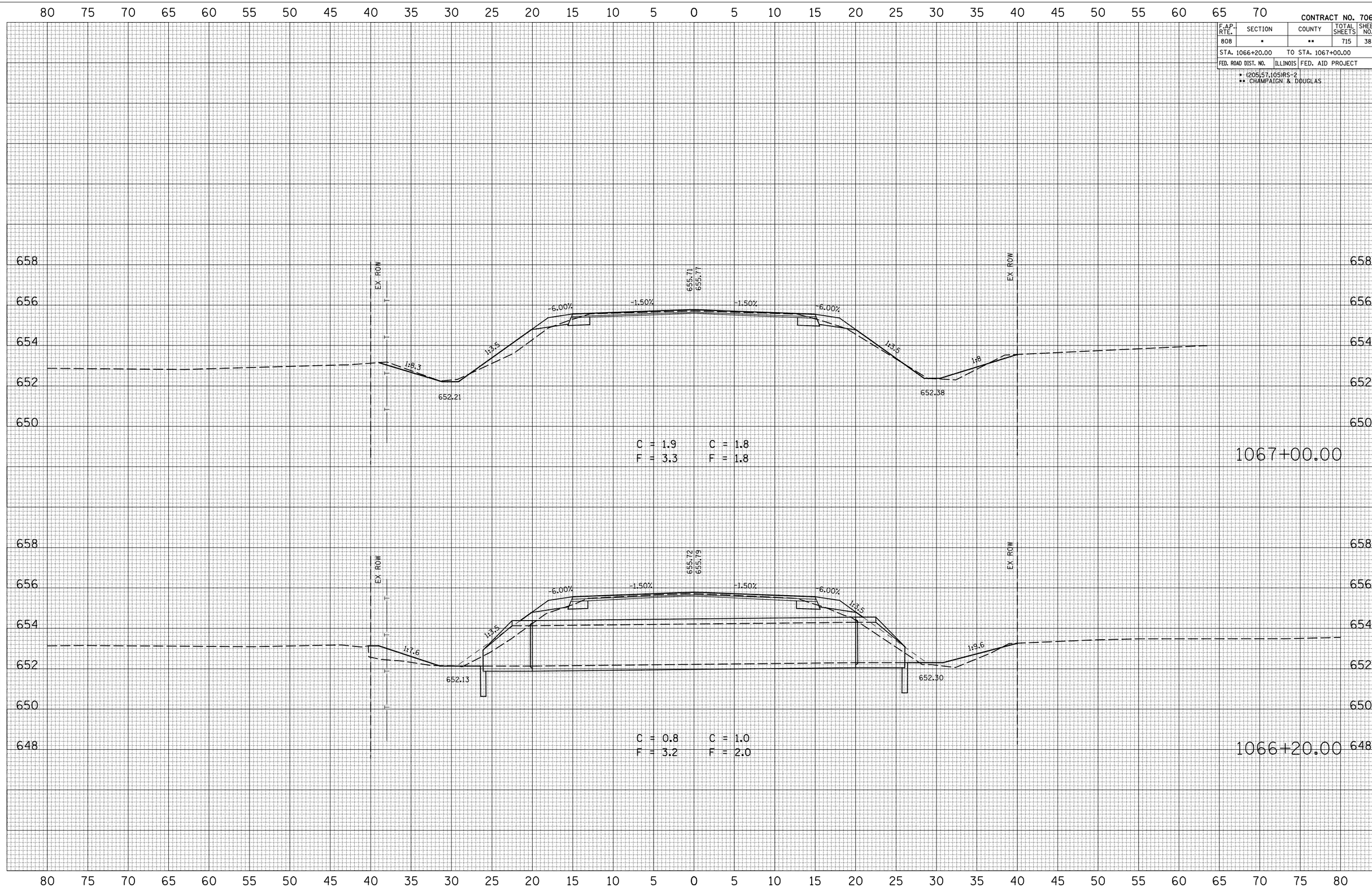

FINAL SURVEY
NOTE BOOK NO.
SURVEYED
PLOTTED
TEMPLATE
AREAS
AREAS CHECKED
BY
DATE

ORIGINAL SURVEY
NO.
SURVEYED
PLOTTED
TEMPLATE
AREAS
AREAS CHECKED
BY
DATE

PLOT DATE = 8/3/2009
FILE NAME = c:\pw_work\PWIDOT\CRAIGRE\d0139422\70623.dgn
PLOT SCALE = 10.5882 ' / IN.
USER NAME = craigre