F.A.I. RTE.	SECTION	COUNTY	TOTAL SHEETS	SHEET NO
55	•	MCLEAN	130	112
FED. ROAD DIST. NO.	ILLINOIS	FED. AID PROJECT		

• (57-4)R, HBY, HBR, (57-4VB)DM
CONTRACT #70757

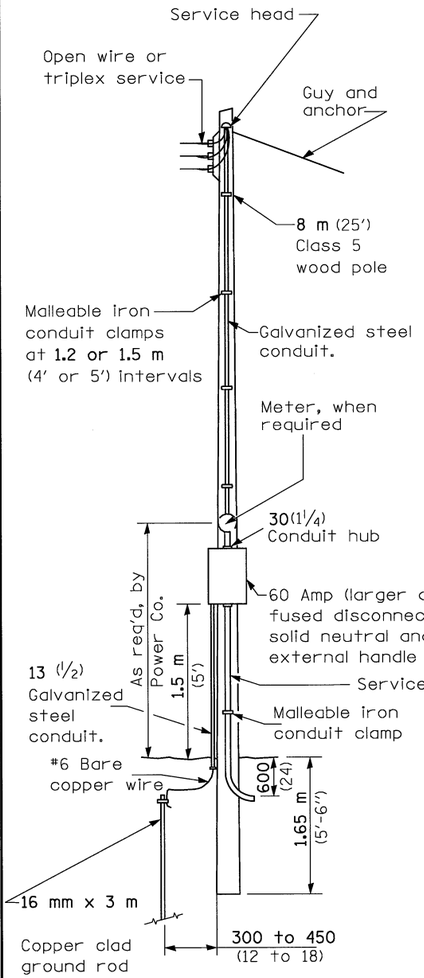

SERVICE POLE

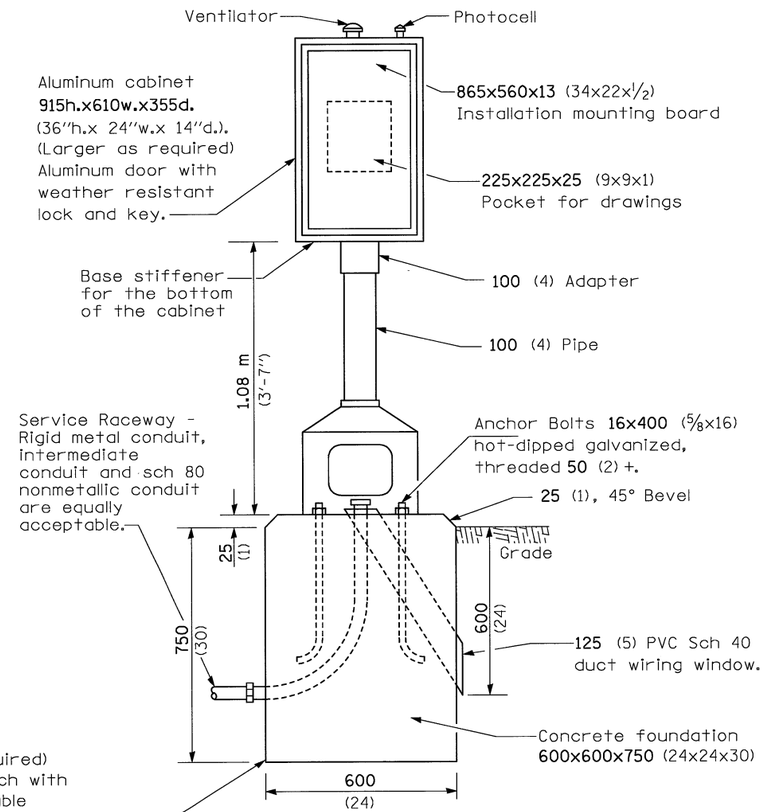

CONTROL INSTALLATION
Front View

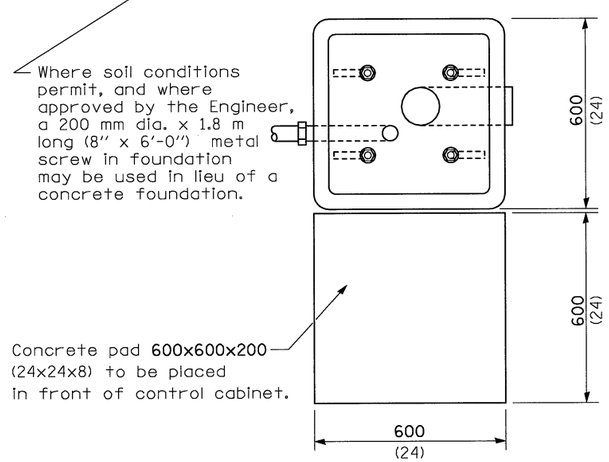

FOUNDATION
Top View

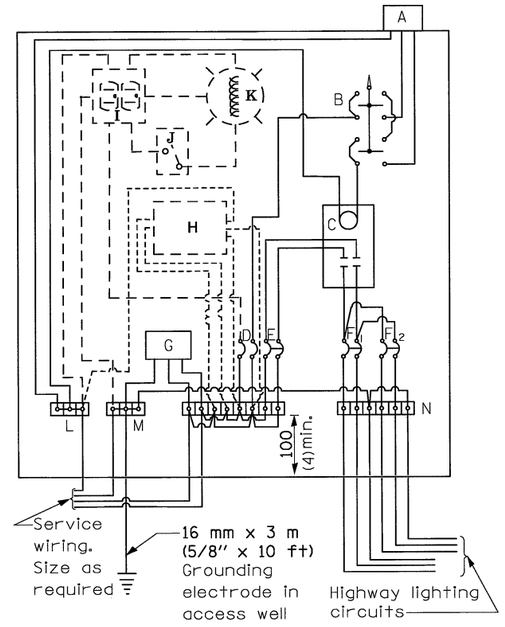

CONTROL SCHEMATIC

MATERIALS

- A Photocell w/ integral surge arrester (remote mount in urban areas)
- B 3 position selector switch HAND-OFF-AUTO
- C 2 pole, 100 amp*, electrically held contactor, 120V operating coil
- D 15 amp, 1 pole, circuit breaker
- E 60 amp*, 2 pole, main circuit breaker
- F 20 amp*, 2 pole, branch circuit breaker (typ). 2 spare c.b. required but not shown
- G Surge arrestor
- H Transformer (see notes), 1 KVA*, 240/480V primary, 120/240V sec, single phase
- I GFCI duplex receptacle
- J Single pole, single throw switch
- K Shielded security fixture with 100W lamp
- L Neutral bar
- M Equipment ground bar
- N Terminal block (typ)

(* = Size larger as needed)

GENERAL NOTES

Locate service pole and control installation adjacent to R.O.W. line with a minimum distance of 9 m (30') from the edge of pavement. Locate in close proximity to the utility transformer so the service drop does not exceed 46 m (150ft) and the total distance of overhead and underground cable (utility transformer to lighting controller) does not exceed 76 m (250ft). Exact location shall be established by the Engineer.

Wiring shall be panel board fashion. All bends shall be right angles. All runs shall vertical or parallel to panel board. Wires shall be grouped or laced.

All control installation components shall be U.L. listed.

Add receptacle, light, and switch in control cabinet, when specified.

For 480 V service, a step down transformer (dashed lines) is required.

Raceways shall terminate 75 (3) above top of concrete foundation.

Label equipment ground buss and neutral buss.

☐ 240 V. SERVICE

☒ 480 V. SERVICE

All dimensions are in millimeters (inches) unless otherwise shown.

REVISIONS	
NAME	DATE

CONTROL INSTALLATION
Pedestal Mount Cabinet

HANSON

JOB NO. 94S2063
DATE 8/21/2009

LAYOUT	JJH	
DRAWN	JJH	
REVIEWED	DLH	03/18/04

8/21/2009
#FILE#