ROUTE NO.	SECTION	COUNTY	TOTAL SHEETS	SHEET NO.
F. A. I. RTE. 55	*	McLEAN	310	152
FED. ROAD DIST. NO. 7		ILLINOIS	FED. AID PROJECT-	

SHEET NO. 20

24 SHEETS

Contract No. 70757

*(57-4) R, HBY, HBR, (57-4VB) DM

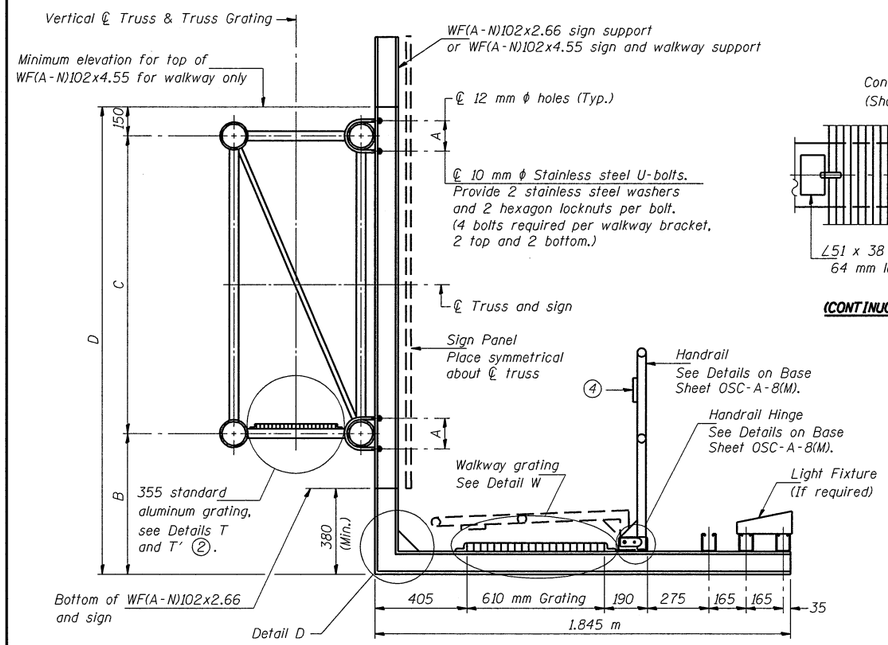

Sign shall be even with the top of the bracket, but it may extend no more than 6" above the top of the bracket for field adjustments.

SECTION B-B

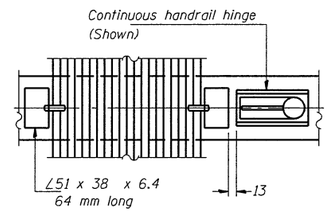

(CONTINUOUS WALKWAY GRATING)

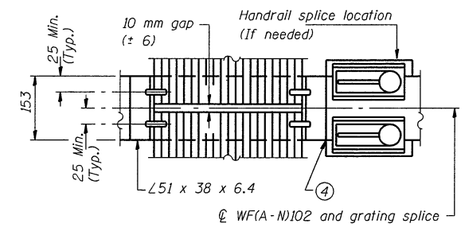

(AT WALKWAY GRATING SPLICE)

SECTION W-W

SPECIFICATIONS FOR STANDARD ALUMINUM GRATING

Main Bearing Bars (MBB) shall be 5 mm x 38 mm on 30 mm centers and conform to ASTM B211 Alloy 6061-T6.

Cross bars (CB) shall be 5 mm x 38 mm on 102 mm centers and conform to ASTM B221 Alloy 6063-T5 or 6061-T6.

OR

Aluminum Grating with modified "t" sections for main bearing bars shall meet the following requirements:

Main bars shall conform to ASTM B221 Alloy 6061-T6 and have a minimum section modulus equal to 1.16 x 10^3 mm^3 per bar, a depth of 38 mm, spaced on 30 mm centers.

Cross bars shall conform to ASTM B221 Alloy 6063-T5 or T-42 and spaced on 100 mm centers.

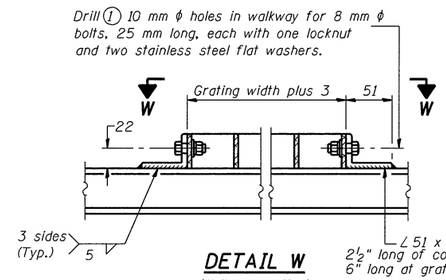

DETAIL W

(Walkway grating)

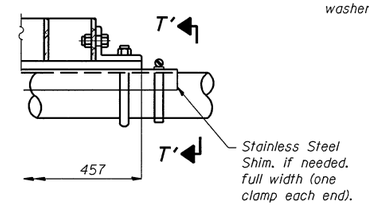

DETAIL T'

(Truss grating splice)

Details not shown same as Detail T.
Alternate materials may be used subject to the Engineer's review and approval.

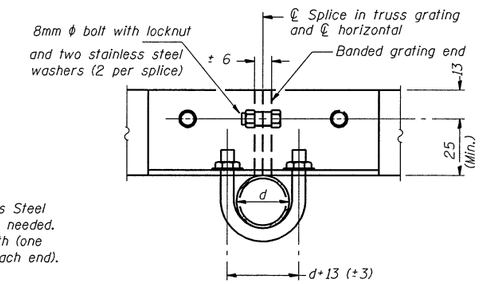

SECTION T'-T'

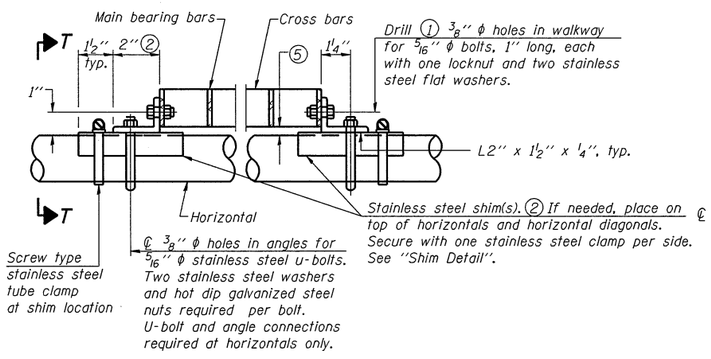

DETAIL T

(Continuous Truss grating)

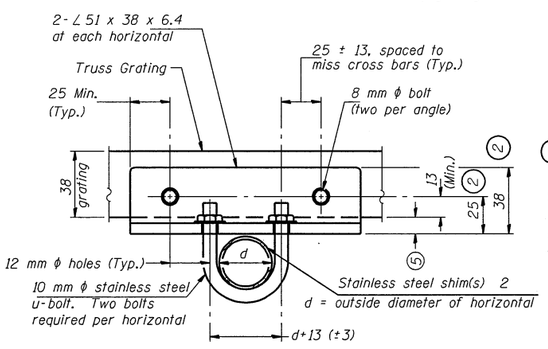

SECTION T-T

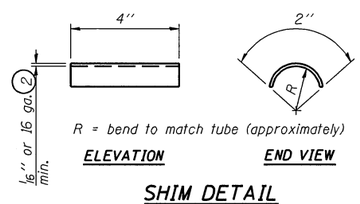

SHIM DETAIL

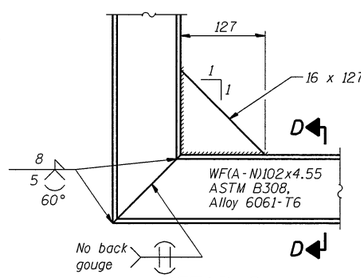

DETAIL D

(See Detail P, Base Sheet OSC-A-8(M).)

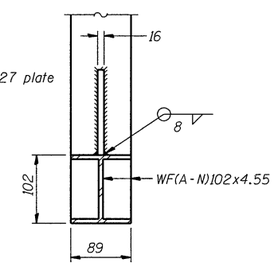

SECTION D-D

① Drilling holes in grating may be done in shop or field, based on Contractor's preference and subject to accurate alignment.

② Stainless steel shims shall be placed as shown in Detail T if needed to compensate for alignment variations between horizontal and diagonal pipes beyond adjustment provided by angles. Thicker shims may be used subject to shims performing properly.

③ If Handrail Joint present, weld angle to WF(A-N)102 and 6 mm extension bars. (See Base Sheet OSC-A-8(M).)

④ ℄ 3 mm x 13 mm x 50 mm welded to handrail posts to protect locations that contact grating.

⑤ Tube to grating gap may vary from 0 to 13mm (Max.) to align walkway, allow for camber, etc.Continuous Truss Grating

Structure Number	Station	A	B	C	D
5C057I055L164.7	37+295	178	1.445	1.68	3.275
5C057I055L164.8	37+297	178	1.140	1.68	2.970
5C057I055L164.9	37+572.5	178	1.215	1.68	3.045

SHEET TITLE: CANTILEVER SIGN STRUCTURES WALKWAY DETAILS ALUMINUM TRUSS & STEEL POST

PROJECT: F.A.I. 55 SECTION (57-4)R, HBY, HBR, (57-4VB)DM McLEAN COUNTY

PROJECT NO. 9450
SCALE
DATE 10/08/04
DRAWN BY TFG
CHECKED BY MCB
DRAWING NO. 20 OF 24 SHTS

COOMBE-BLOXDORF P.C.
Engineers / Land Surveyors
Springfield, Illinois
Design Firm License No. 184-002703

7/8/2009
$FILEABBREV$

OSC-A-7(M) 11/1/2002