ROUTE NO.	SECTION	COUNTY	TOTAL SHEETS	SHEET NO.
F. A. I. RTE. 55	*	McLEAN	310	153
FED. ROAD DIST. NO. 7	ILLINOIS	FED. AID PROJECT-		

SHEET NO. 21
24 SHEETS

Contract No. 70757
*(57-4) R, HBY, HBR, (57-4VB) DM

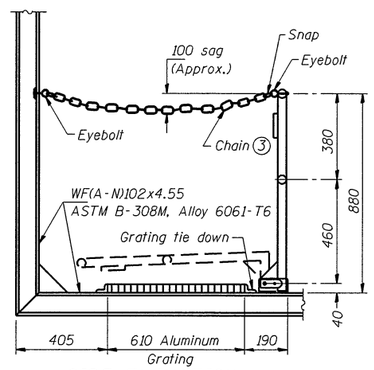

SIDE ELEVATION

(Showing Safety Chain W/O Sign)

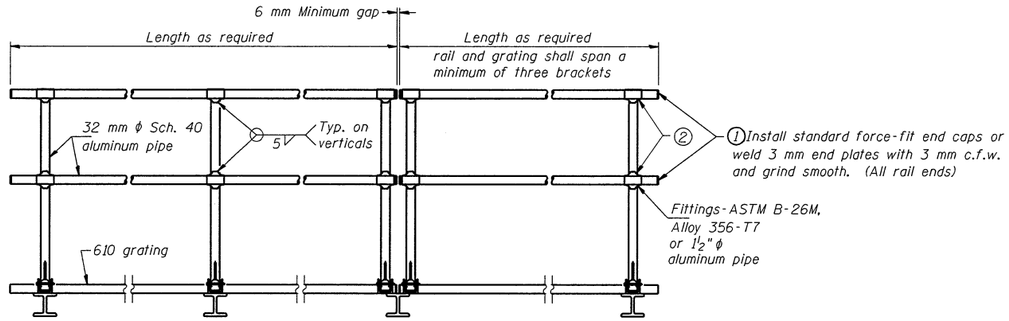

HANDRAIL DETAILS

FRONT ELEVATION

Handrail pipe shall be ASTM B241M, Alloy 6063-T6 or Alloy 6061-T6.

(2) Horizontal handrail member shall be continuous thru fitting. Provide 12 mm ϕ hole in fitting for 10 mm ϕ bolt. Field drill 12 mm ϕ hole in horizontal rail member. Provide locknut and two stainless steel washers for bolt. (Use 8 mm eyebolts in 12 mm ϕ holes on top rail at ends only.)

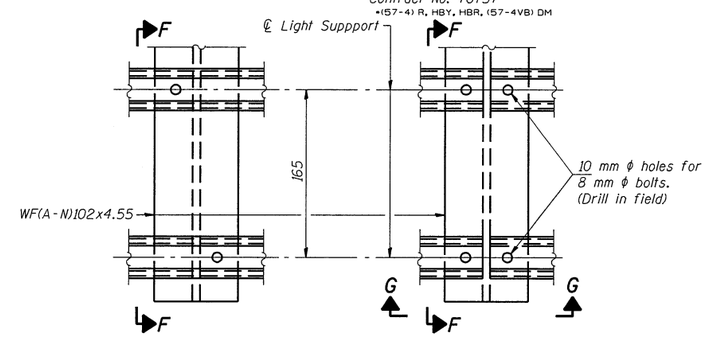

DETAIL F

DETAIL G

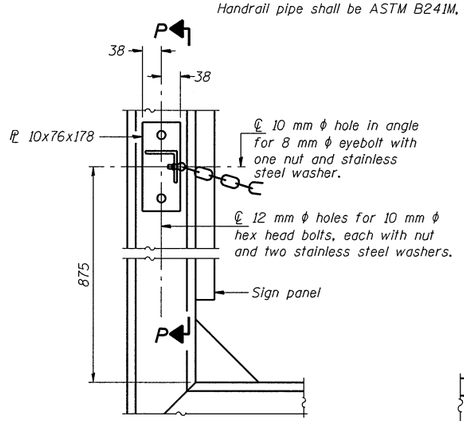

ALTERNATE SAFETY CHAIN ATTACHMENT

(With Sign Present)
Items not shown same as "Side Elevation" of "Handrail Details"

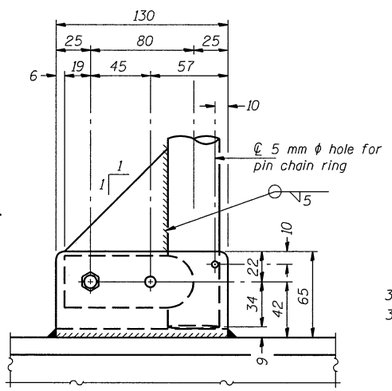

SIDE ELEVATION

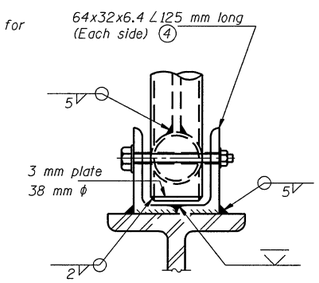

FRONT ELEVATION

See "ELEVATION" at right for dimensions.

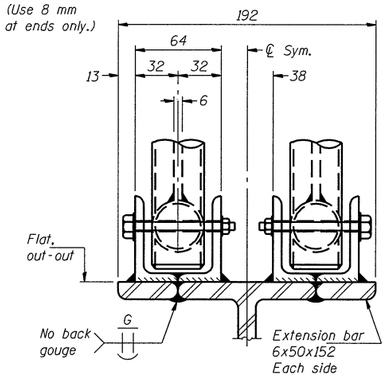

ELEVATION AT HANDRAIL JOINT (4)

Details not shown same as "FRONT ELEVATION"

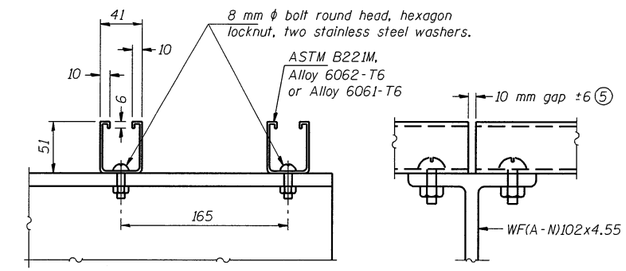

SECTION F-F

SECTION G-G

LIGHTING FIXTURE MOUNTS (IF REQUIRED)

(5) Field cut ends of light support channels shall be free of burrs or hazardous projections and coated with zinc-rich primer or equivalent.

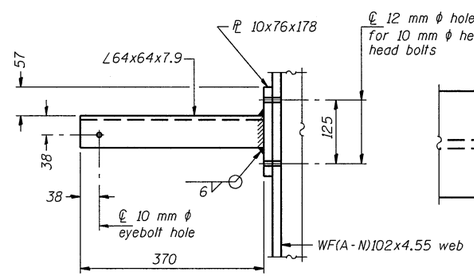

SECTION P-P

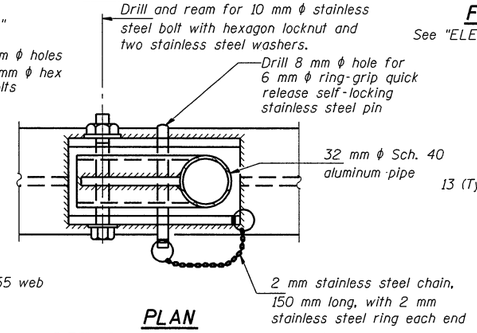

PLAN

DETAIL E HANDRAIL HINGE

NUMBER	REVISION	DATE

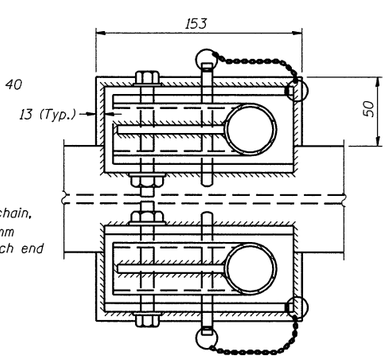

PLAN AT HANDRAIL JOINT

Details not shown same as "PLAN"

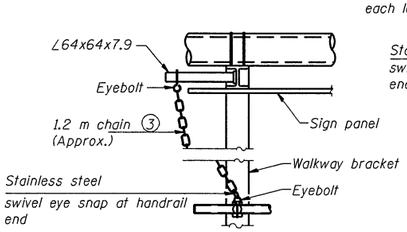

ALTERNATE SAFETY CHAIN ATTACHMENT

Details not shown similar to "Safety Chain" Details (Walkway omitted for clarity)

(3) 5 mm Type 304L stainless steel chain, approximately 40 links per meter.

(4) Extrusions may be used in lieu of the details shown, with approval of the Engineer.

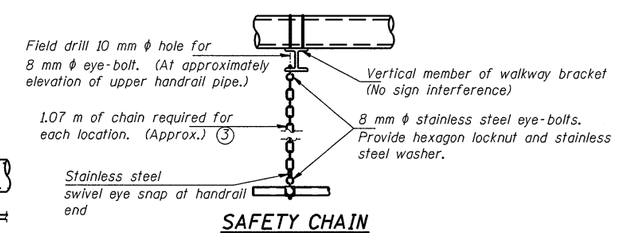

SAFETY CHAIN

One required for each end of each walkway.

SHEET TITLE: CANTILEVER SIGN STRUCTURES HANDRAIL DETAILS ALUMINUM TRUSS & STEEL POST	
PROJECT: F.A.I. 55 SECTION (57-4)R, HBY, HBR, (57-4VB)DM McLEAN COUNTY	PROJECT NO. 9450
	SCALE
	DATE 10/08/04
	DRAWN BY TFG
	CHECKED BY MCB
COOMBE-BLOXDORF P.C. Engineers/Land Surveyors Springfield, Illinois Design Firm License No. 184-002703	DRAWING NO. 21 OF 24 SHTS

OSC-A-8(M) 11/1/2002

7/8/2009
$FILEABBREV$