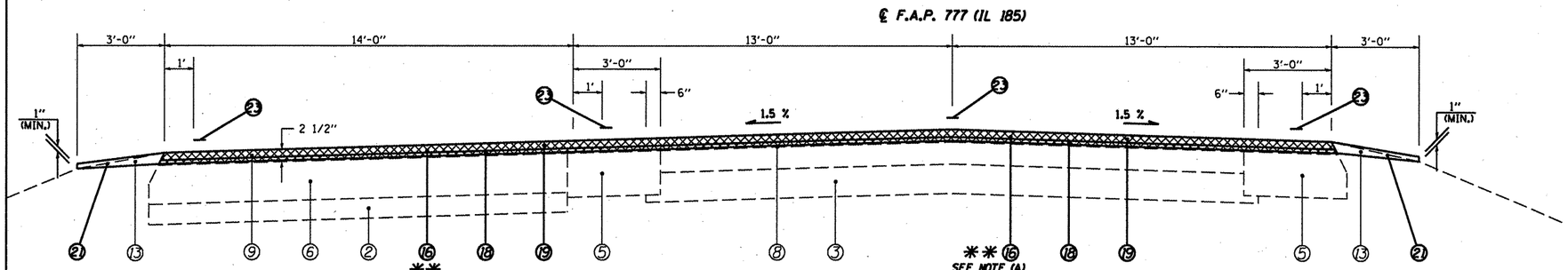

(3) STA 431+65.00 TO STA 439+35.00 [770']

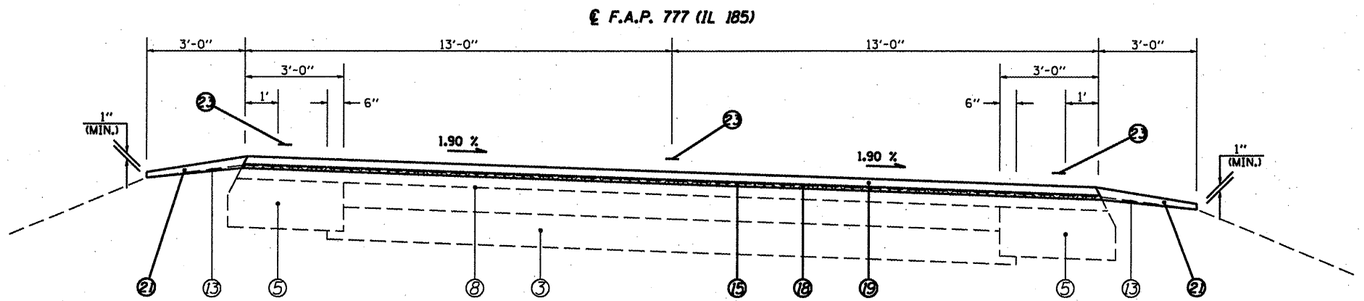

(6) STA 442+62.00 TO STA 454+50.00 [1,188']

FULL S.E.:	(S.E.#1 = 1.90%)
STA 443+63.59 to 453+52.99	
S.E. TRANSITION:	
STA 442+64.86 TO 443+63.59	
STA 453+52.99 TO 454+51.72	

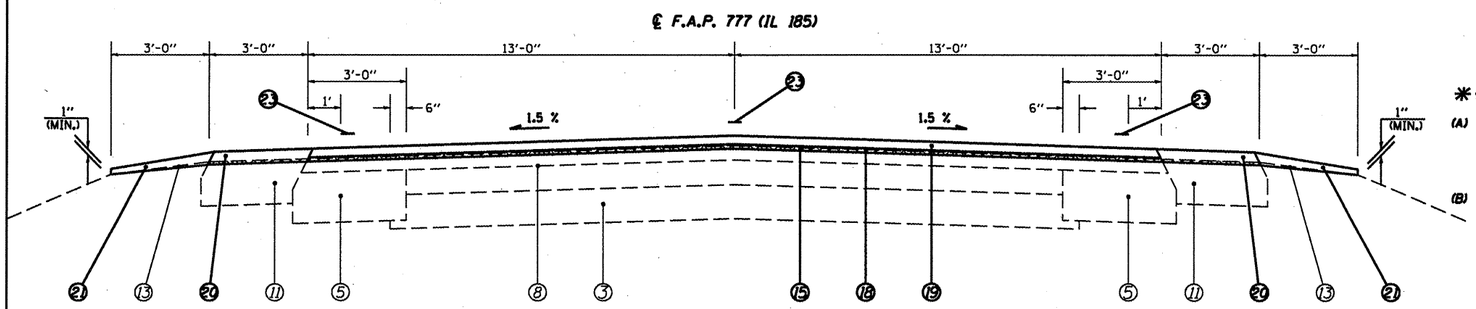

(8) STA 462+75.00 TO STA 463+09.00 [34']

(38) STA 854+75.00 TO STA 859+48.00 [473']

LEGEND

1. EXIST. P.C.C. SIDEWALK 4"
2. EXIST. SUB-BASE GRANULAR MATERIAL 4"
3. EXIST. AGGREGATE BASE COURSE 6"
4. EXIST. STABILIZED BASE COURSE, VAR. FR. 0 TO 9"
5. EXIST. BITUMINOUS BASE COURSE WIDENING 9"
6. EXIST. BITUMINOUS BASE COURSE WIDENING 8"
7. EXIST. BITUMINOUS BASE COURSE 10"
8. EXIST. BITUMINOUS OVERLAY 7"
9. EXIST. BITUMINOUS OVERLAY
10. EXIST. CONCRETE GUTTER, TYPE A
11. EXIST. BITUMINOUS SHOULDERS 8"
12. EXIST. BITUMINOUS SHOULDERS 10"
13. EXIST. AGGREGATE SHOULDER, TYPE B
14. EXIST. PIPE UNDERDRAIN 4"
15. PROP. HOT-MIX ASPHALT SURFACE REMOVAL (VARIABLE DEPTH) *
16. PROP. HOT-MIX ASPHALT SURFACE REMOVAL 2 1/4"
17. PROP. HOT-MIX ASPHALT SURFACE REMOVAL 1 1/2"
18. PROP. LEVELING BINDER (MACHINE METHOD), N50 3/4"
19. PROP. HOT-MIX ASPHALT SURFACE COURSE, MIX "C", N50 1 1/2"
20. PROP. HOT-MIX ASPHALT SHOULDERS
21. PROP. AGGREGATE SHOULDERS, TYPE B
22. PROP. THERMOPLASTIC PAVEMENT MARKING - LINE 5"
23. PROP. PAINT PAVEMENT MARKING - LINE 5"

* NOMINAL MILLING DEPTH 1/2 " @ ℄

** NOTE:

(A) PROP. THICKNESS OF HMA SURFACE REMOVAL VAR. FR. 1/2" TO 2 1/4" FR. STA. 431+65.00 TO 432+00.00 AND VARIES FR. 2 1/4" TO 1/2" FR. STA. 439+00.00 TO 439+35.00. THESE AREAS SHALL BE INCLUDED IN THE COST FOR HMA SURFACE REMOVAL, VARIABLE DEPTH.

(B) PROP. THICKNESS OF HMA SURFACE REMOVAL VAR. FR. 2 1/4" TO 1/2" FR. STA. 854+75.00 TO 855+10.00 AND SHALL BE INCLUDED IN THE COST FOR HMA SURFACE REMOVAL, VARIABLE DEPTH.

(NOT TO SCALE)

FILE NAME = c:\pw_work\pwidot\coxjw\dms22861\ShtTypicals.dgn	USER NAME = coxjw	DESIGNED - JWC	REVISED -
		DRAWN - JWC	REVISED -
	PLOT SCALE = 106.0000 ' / IN.	CHECKED - RSC	REVISED -
	PLOT DATE = Aug-13-2009 02:27:36PM	DATE -	REVISED -

STATE OF ILLINOIS
DEPARTMENT OF TRANSPORTATION

TYPICAL SECTIONS

SCALE: NTS | SHEET NO. 2 OF 9 SHEETS | STA. TO STA.

F.A.P. RTE.	SECTION	COUNTY	TOTAL SHEETS	SHEET NO.
777	10RS-5	Montgomery	54	5
		CONTRACT NO. 72A68		
		ILLINOIS FED. AID PROJECT		