STATE OF ILLINOIS
DEPARTMENT OF TRANSPORTATION

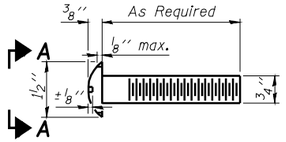

DETAIL OF 3/4" ϕ ROUND HEAD BOLT

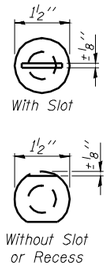

VIEW A-A

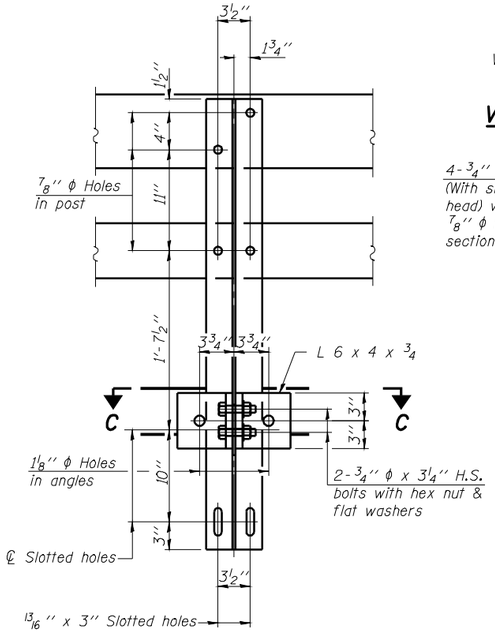

SECTION B-B

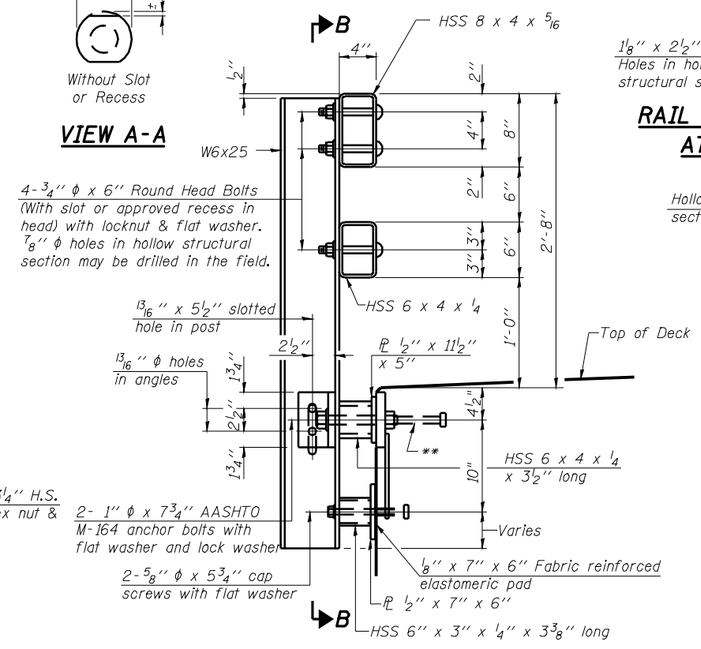

SECTION AT RAIL POST

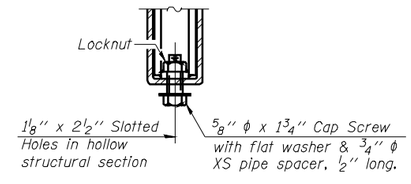

RAIL SPLICE CONNECTION AT EXPANSION JT.

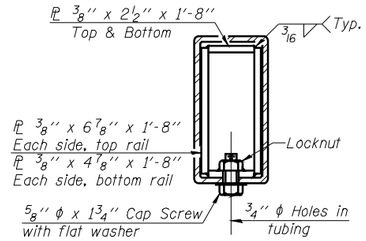

SECTION AT RAIL SPLICE

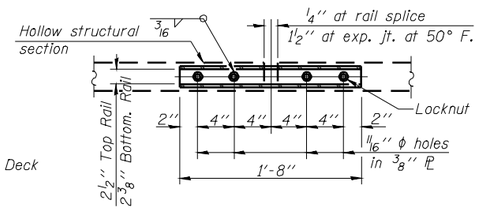

PLAN-BOTTOM SPLICE PL TYPICAL

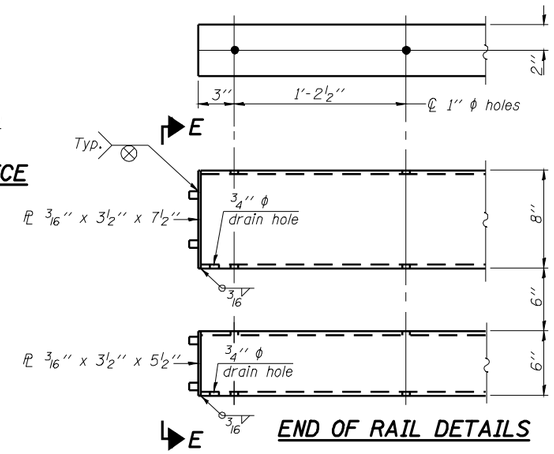

END OF RAIL DETAILS

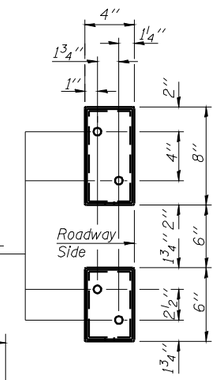

VIEW E-E

℄ - 5/8" reduced base welded studs. Provide 4 - 5/8" washers and self-locking nuts or nuts and jam nuts for guardrail connection shown on Std. 631032

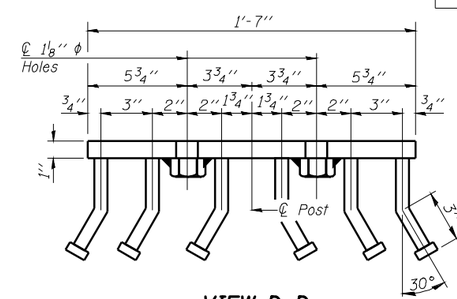

VIEW D-D

Notes:

All field drilled holes shall be coated with an approved zinc rich paint before erection.

For multi-span bridges, sufficient 1/4" x 6" x 1'-2" galvanized steel shims shall be provided to align rail between adjacent spans. Cost included with Steel Railing, Type SM.

Steel rail elements shall be galvanized according to Article 509.05 of the Standard Specifications.

**The studs of the anchor devices shall be placed below the top reinforcement bars and the outermost longitudinal reinforcement bar shall be placed directly above the studs of the rail post anchor device.

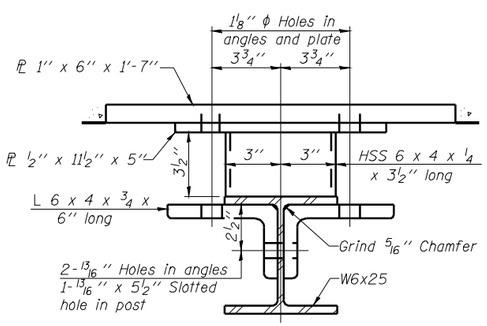

SECTION C-C

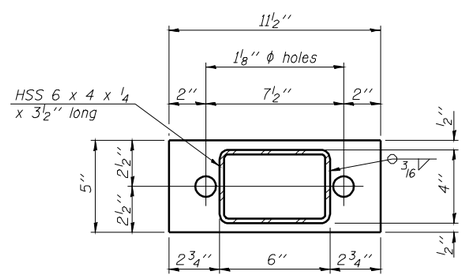

PL 1/2" x 11 1/2" x 5"

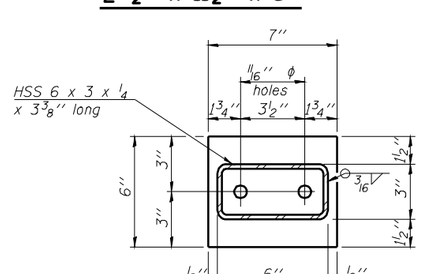

PL 1/2" x 7" x 6"

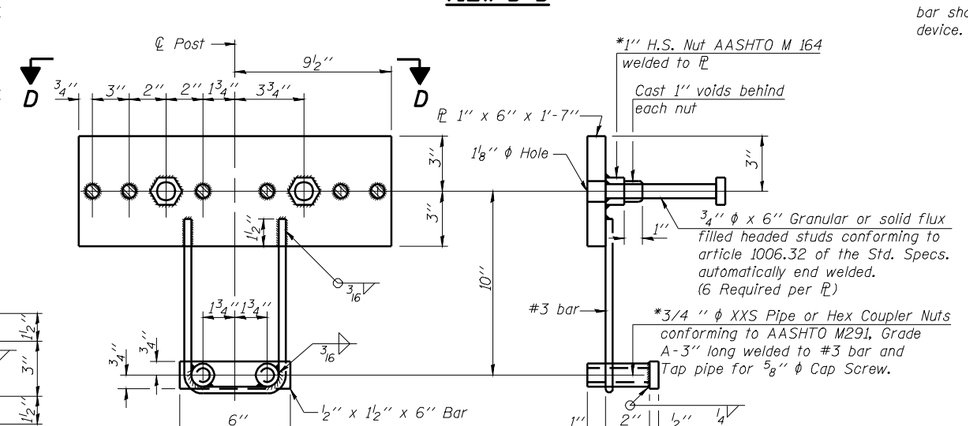

ANCHOR DEVICE

*Threaded areas shall be plugged or blocked off during casting of beam. Galvanized after fabrication.

BILL OF MATERIAL

Item	Unit	Quantity
Steel Railing, Type SM	Foot	392

STEEL RAILING, TYPE SM WITH CONCRETE WEARING SURFACE STRUCTURE NO. 085-0001

DESIGNED	CMW
CHECKED	JSA
DRAWN	TJW
CHECKED	CMW

HOELSCHER ENGINEERING
11 Executive Drive Suite 12
Fairview Heights, Illinois 62208
(618) 624-8610
(618) 624-8611 (fax)
2501 Chatham Road, Suite 120
Springfield, Illinois 62704
(217) 698-8610
(217) 698-8608 (fax)
115 North Neil Street, Suite 105
Champaign, Illinois 61820
(217) 351-8610
(217) 351-8611 (fax)

R-34CWS 5-16-08

(6'-3" Maximum Post Spacing) (5" minimum to 7 1/8" maximum CWS thickness)

SHEET NO. 13	F.A. RTE.	SECTION	COUNTY	TOTAL SHEETS	SHEET NO.
20 SHEETS	310 (US 67)	(87B) BR	SCHUYLER	80	54
			CONTRACT NO. 72B95		
	FED. ROAD DIST. NO.	ILLINOIS	FED. AID PROJECT		