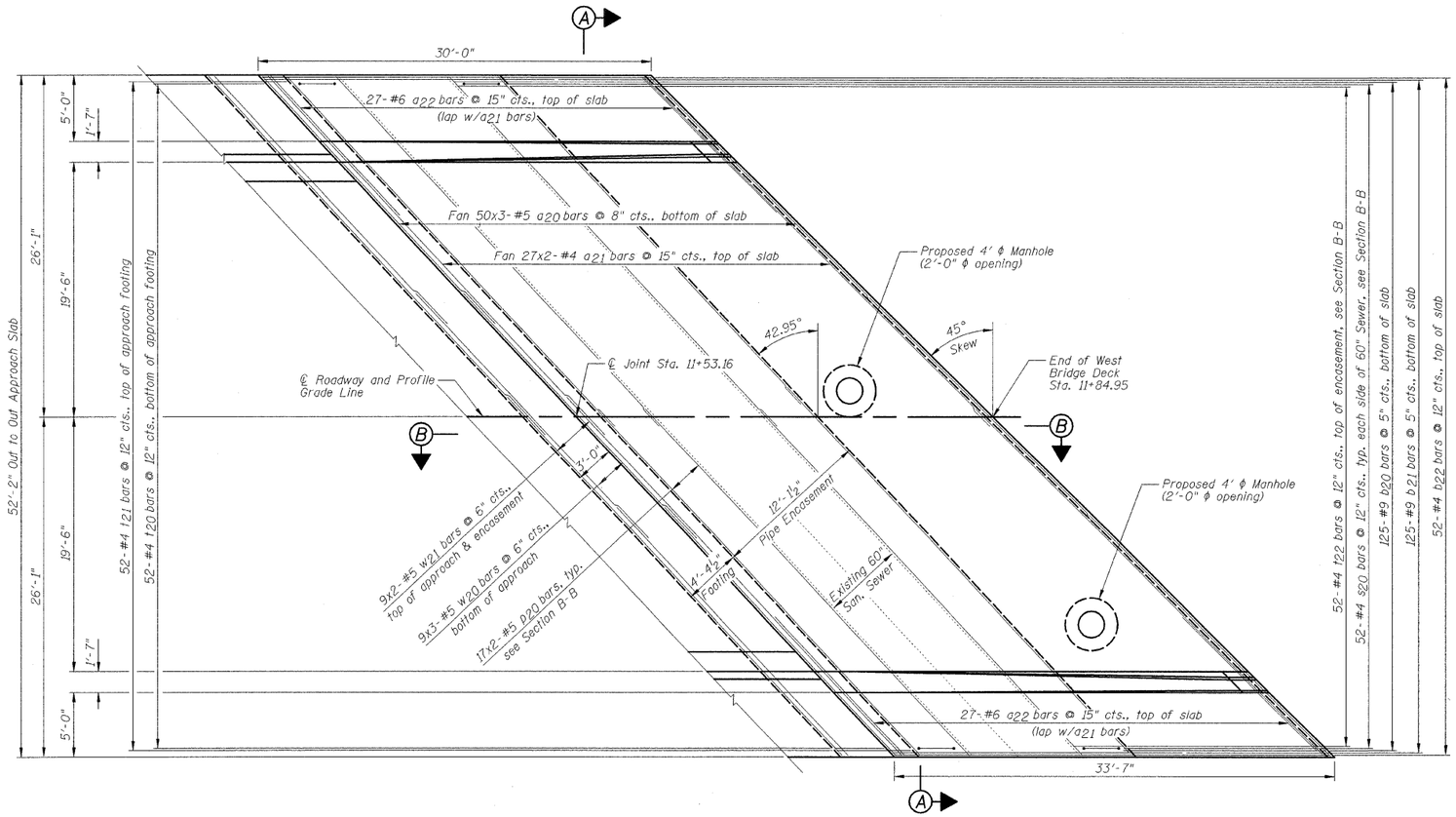

WEST APPROACH PLAN

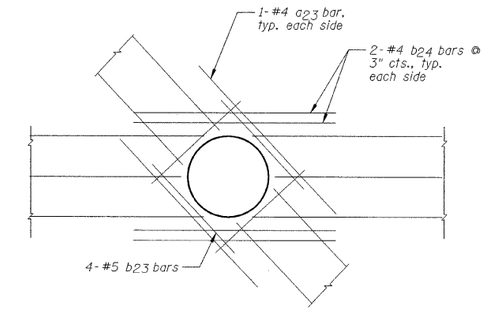

TOP OF SLAB REINFORCEMENT
AROUND 4' ϕ MANHOLE

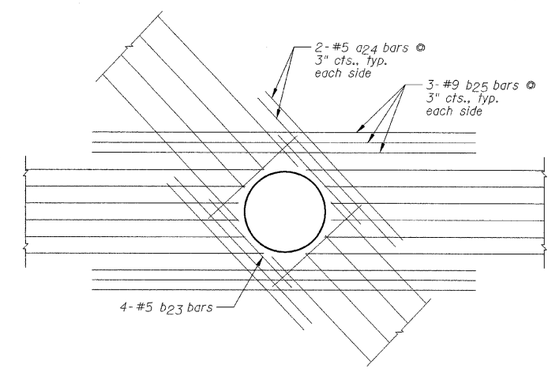

BOTTOM OF SLAB REINFORCEMENT
AROUND 4' ϕ MANHOLE

N

BAR LAP	
#4	1'-4"
#5	1'-8"
#9	4'-5"

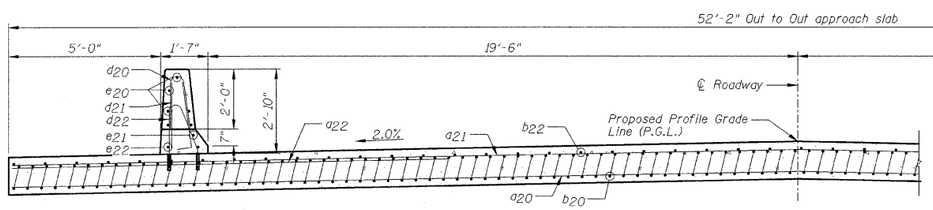

NEAR ABUTMENT

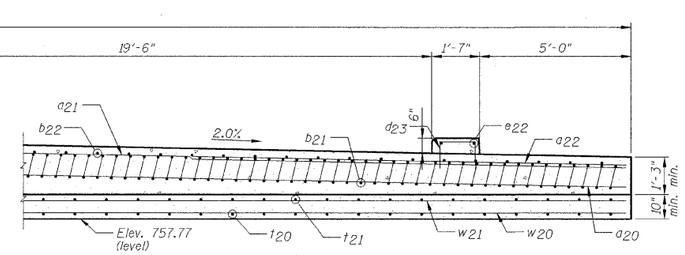

AT APPROACH FOOTING

SECTION A-A

NOTES:

1.) a20 thru a22 bar spacings measured perpendicular to ℄ Roadway.
2.) Tilt b20 and b21 bars as required to maintain clearance.
3.) Approach Slab shall be paid for as Concrete Superstructure.
4.) Approach Footing concrete shall be paid for as Concrete Structures.
5.) Pipe Encasement shall be paid for as Concrete Structures.
6.) Reinforcement shall be paid for as Reinforcement Bars, Epoxy Coated.
7.) For v4 bar details, see Sheet C2.
8.) The Approach Footing maximum applied service bearing pressure (Qmax) = 2.0 ksf.
9.) See Sheet C22 for Bar Splicer Details.
10.) Cost of excavation for Approach Footing included with Concrete Structures.
11.) Order b22 bars full length, cut to fit within top slab. Discard remainder of b22 bars.
12.) Cut a20, a21, a22, b20 and b22 bars as necessary to miss manholes.

DESIGNED - SDH	REVISED -	TOWN OF NORMAL	WEST APPROACH SLAB			VIRGINIA AVENUE OVER SUGAR CREEK SECTION 04-00226-00-BR MCLEAN COUNTY	F.A.U.	SECTION	COUNTY	TOTAL SHEETS	SHEET NO.
DRAWN - JWK	REVISED -						6366	04-00226-00-BR	MCLEAN	52	33
CHECKED - MSW	REVISED -						S.N. 057-7834		CONTRACT NO. 91416		
DATE - 07/22/2009	REVISED -		SCALE:	SHEET NO. C12 OF 23 SHEETS	STA.	TO STA.	FED. ROAD DIST. NO.	ILLINOIS	FED. AID PROJECT		