STATE OF ILLINOIS
DEPARTMENT OF TRANSPORTATION

SPECIFICATIONS FOR STANDARD ALUMINUM GRATING

Main Bearing Bars (MBB) shall be $\frac{3}{16}$" x $1\frac{1}{2}$" on $1\frac{3}{16}$" centers and conform to ASTM B211 Alloy 6061-T6.

Cross bars (CB) shall be $\frac{3}{16}$" x $1\frac{1}{2}$" on 4" centers and conform to ASTM B221 Alloy 6063-T5 or 6061-T6.

OR

Aluminum Grating with modified "t" sections for main bearing bars shall meet the following requirements:

Main bars shall conform to ASTM B221 Alloy 6061-T6 and have a minimum section modulus equal to 0.0705 in.^{3} per bar, a depth of $1\frac{1}{2}$", spaced on $1\frac{3}{16}$" centers.

Cross bars shall conform to ASTM B221 Alloy 6063-T5 or T-42 and spaced on 4" centers.

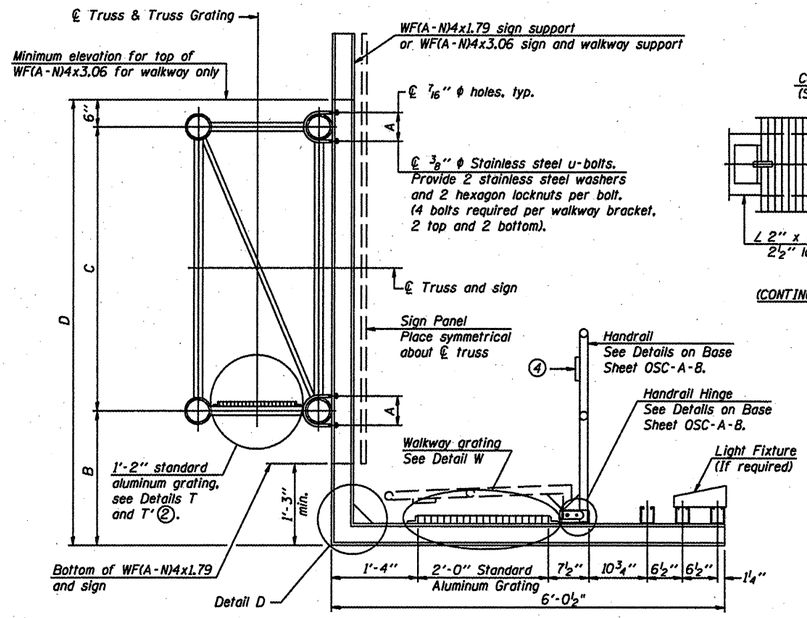

SECTION B-B

Sign shall be even with the top of the bracket, but it may extend no more than 6" above the top of the bracket for field adjustments.

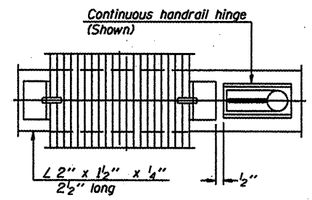

(CONTINUOUS WALKWAY GRATING)

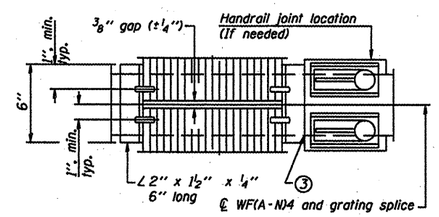

(AT WALKWAY GRATING SPLICE)

SECTION W-W

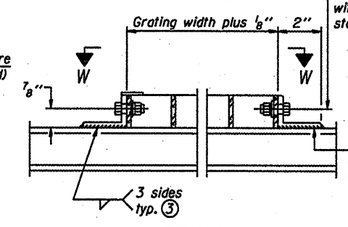

DETAIL W
(Walkway grating)

Drill ① $\frac{3}{8}$" ϕ holes in walkway for $\frac{5}{16}$" ϕ bolts, 1" long, each with one locknut and two stainless steel flat washers.

L2" x 1½" x ¼" 2½" long a continuous grating, 6" long at grating splices.

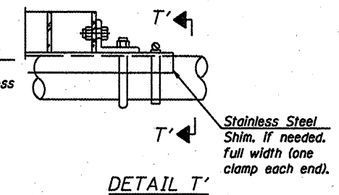

DETAIL T'
(Truss grating splice)

Details not shown same as Detail T. Alternate materials may be used subject to the Engineer's review and approval.

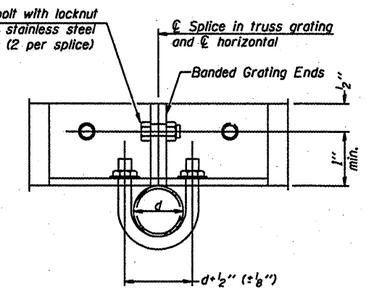

SECTION T'-T'

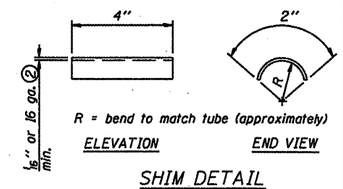

SHIM DETAIL

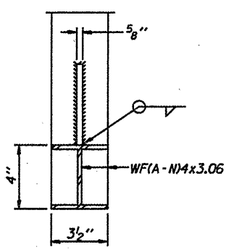

SECTION D-D

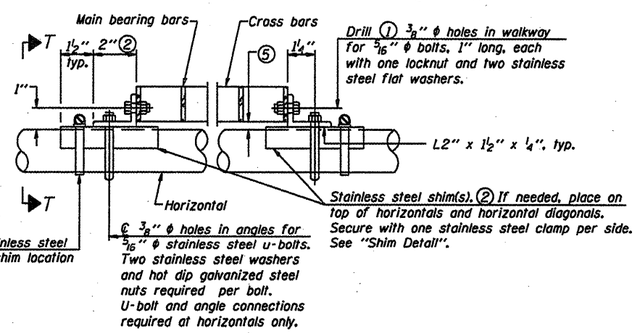

DETAIL T
(Continuous Truss grating)

① Drilling holes in grating may be done in shop or field, based on Contractor's preference and subject to accurate alignment.

② Stainless steel shims shall be placed as shown in Detail T if needed to compensate for alignment variations between horizontal and diagonal pipes beyond adjustment provided by angles. Thicker shims may be used subject to shims performing properly.

③ If Handrail Joint present, weld angle to WF(A-N)4 and ¼" extension bars. (See Base Sheet OSC-A-B.)

④ ℙ ⅛" x ½" x 2" welded to handrail posts to protect locations that contact grating.

⑤ Tube to grating gap may vary from 0 to ½", max. to align walkway, allow for camber, etc.

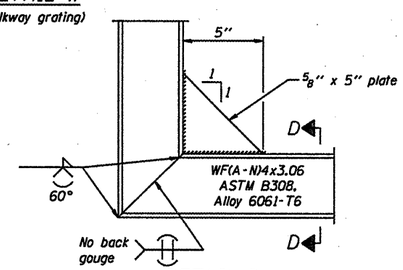

DETAIL D

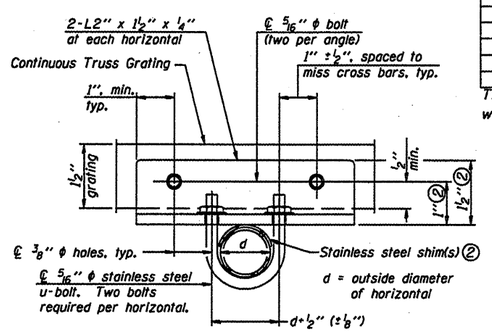

SECTION T-T

Structure Number	Station	A	B	C	D
6C0841055L107.2	220 + 00	7"	1'-9"	5'-6"	7'-9" ✱

The Contractor and the Engineer shall field verify the dimensions for all walkway support brackets.

NUMBER	REVISION	DATE

CANTILEVER SIGN STRUCTURES
WALKWAY DETAILS
ALUMINUM TRUSS & STEEL POST

District 6
Overhead Sign Structure Replacement

DESIGNED -
CHECKED -
DRAWN -
CHECKED -

EXAMINED - 20
ENGINEER OF BRIDGE DESIGN
PASSED
ENGINEER OF BRIDGES AND STRUCTURES