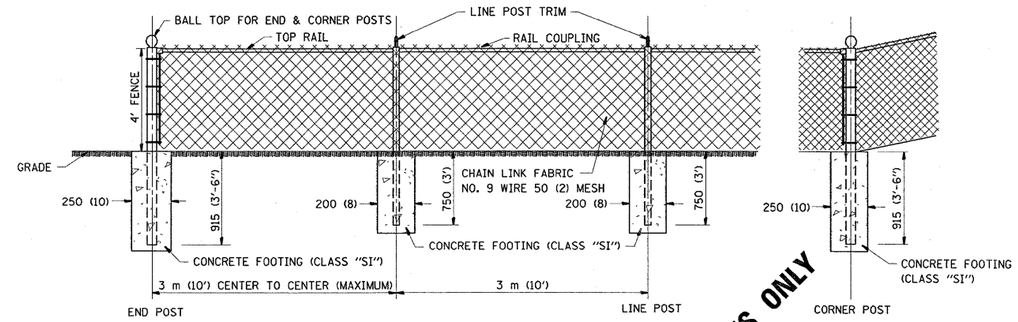

CHAIN LINK FENCE

FOR INFORMATIONAL PURPOSES ONLY

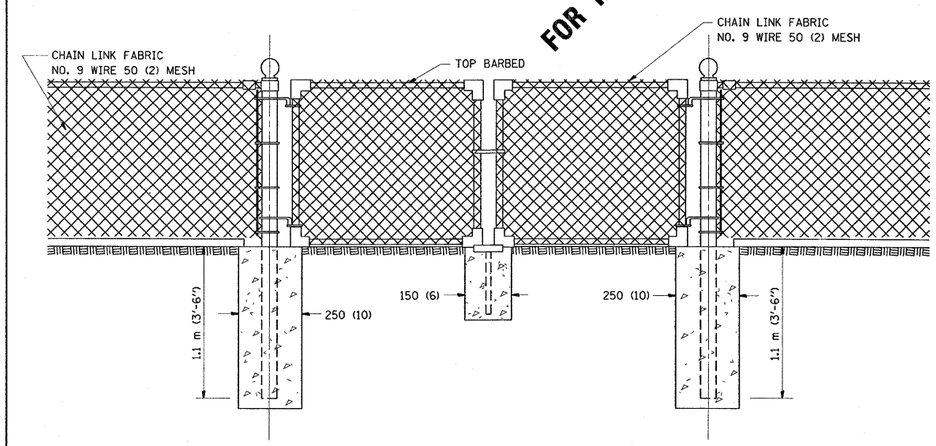

DRIVE GATE 1 m (3'-7") X 3 m (10')

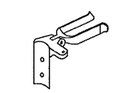

FORK LATCH

GATE REST

ALL DIMENSIONS ARE IN MILLIMETERS (INCHES)
UNLESS OTHERWISE SHOWN.

NOTE:

THE CHAIN LINK FENCE AS SHOWN HEREIN SHALL BE CONSTRUCTED AT SUCH LOCATIONS AS SHOWN ON PLANS AND IN ACCORDANCE WITH THE SPECIAL PROVISIONS

THE ENGINEER SHALL ESTABLISH ALL NECESSARY LINE AND GRADE PRIOR TO THE ERECTION OF THE FENCE IN CONFORMANCE WITH THE PLANS

FILE NAME = c:\projects\m147393\maint_aa.dgn	USER NAME = midyja	DESIGNED -	REVISED -
		DRAWN -	REVISED -
	PLOT SCALE = 50.000 ' / IN.	CHECKED -	REVISED -
	PLOT DATE = 8/28/2008	DATE -	REVISED -

STATE OF ILLINOIS
DEPARTMENT OF TRANSPORTATION

CHAIN LINK FENCE
STD. 10-SS-506 B

SCALE: | SHEET NO. OF SHEETS | STA. TO STA.

F.A. RTE.	SECTION	COUNTY	TOTAL SHEETS	SHEET NO.
VAR	2008-059 I	VARIOUS	14	10
		CONTRACT NO. 60F17		

FED. ROAD DIST. NO. | ILLINOIS | FED. AID PROJECT