EARTH TECH A tyco INTERNATIONAL LTD. COMPANY	F.A.U. RTE.	SECTION	COUNTY	TOTAL SHEETS	SHEET NO.
	1463	1010.1B	COOK	171	95
	STA.		TO STA.		
	FED. ROAD DIST. NO.	ILLINOIS	FED. AID PROJECT		

CONTRACT NO. 62196
S20 of S30

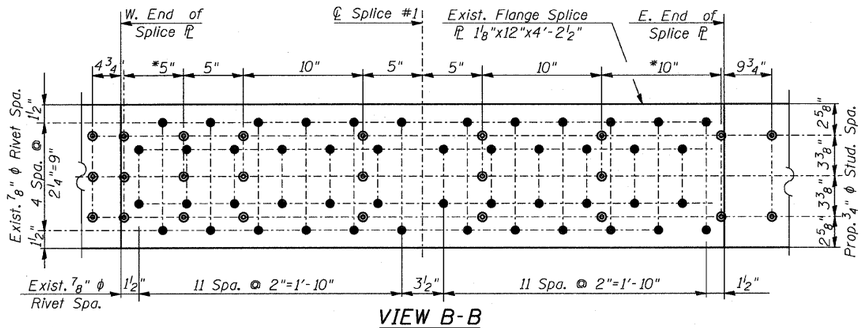

VIEW B-B

*Adjust studs locally to provide 1" min. edge dist.

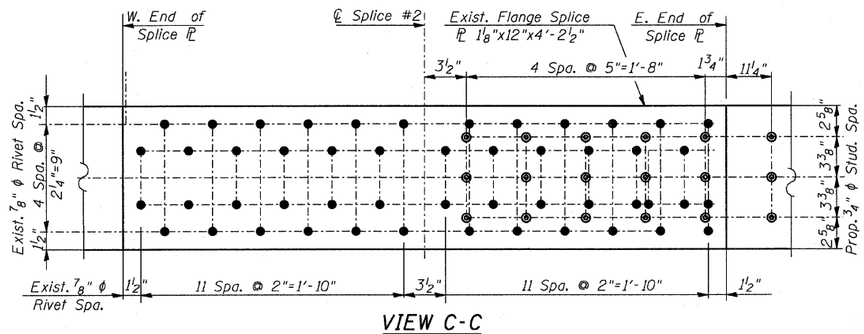

VIEW C-C

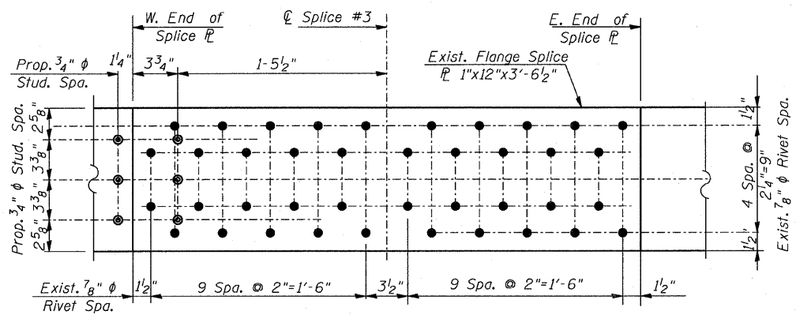

VIEW D-D

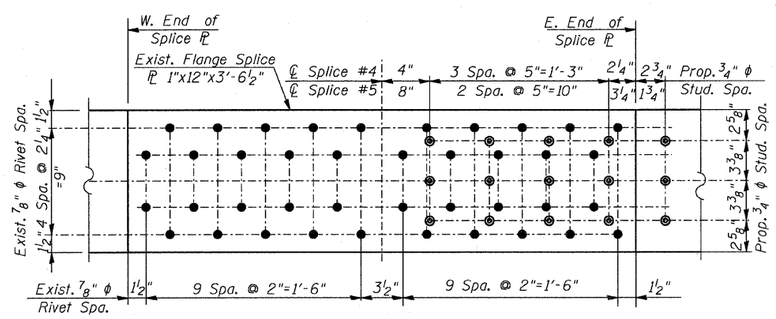

VIEW E-E

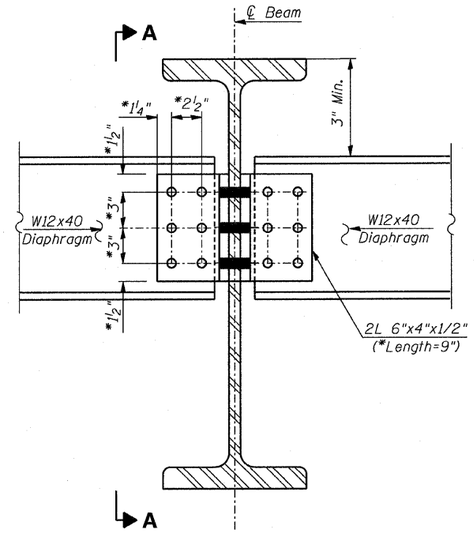

DIAPHRAGM D1 DETAIL

*Contractor to verify in field

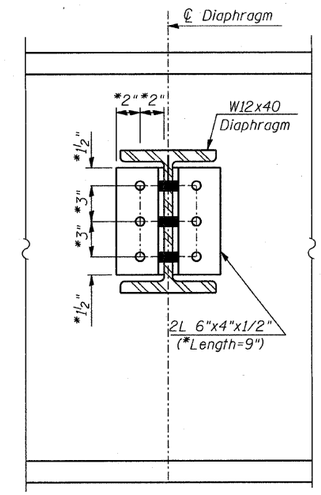

SECTION A-A

* Contractor to verify in field.

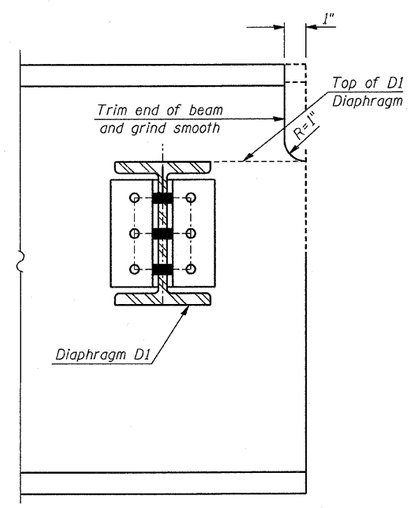

DETAIL 1

Notes:

1. Work this sheet with Sheets S18-S20.
2. All dimensions and other info for existing steel beams and diaphragms were taken from existing bridge plans (not as-builts).
3. Contractor to verify all dimensions in field.
4. AASHTO M270 Gr. 36 steel shall be used for all diaphragms and connection plate material.
5. Detail 15/16" ϕ holes for all ¾" ϕ bolts.
6. Two hardened washers required for each set of oversized holes.
7. All diaphragms shall be installed as steel is erected and secured with erection pins and bolts except as otherwise noted. Individual diaphragms at supports may be temporarily disconnected to install bearing anchor rods.

BILL OF MATERIAL

	Item	Unit	Total
	Furnishing and Erecting Structural Steel	Pound	3,760
	Stud Shear Connectors	Each	10,179
	Structural Steel Removal	Pound	320,950
**	Jack and Remove Existing Bearings	Each	63
	Cleaning and Painting Steel Bridge, No. 1	L. Sum	1
	Containment and Disposal of Lead Paint Cleaning Residues	L. Sum	0.5

** Includes jacking & removal of existing rocker & roller bearings at the Abutments & Piers 1, 3, 4, & 6 (Beams 2-10 only). Fixed bearings at Piers 2 & 5 (Beams 2-10 only) are to remain in place. Removal of all the remaining bearings is incuded with "Structural Steel Removal".

REVISIONS	
NAME	DATE

ILLINOIS DEPARTMENT OF TRANSPORTATION

STEEL DETAILS

31 ST. STREET OVER M.J. & C.W.I.R.R.
F.A.U. ROUTE 1463 SECTION 159-1010.1B
COOK COUNTY
STATION 217+09.66
STR. NO. 016-0871

SCALE: VERT. HORIZ. DRAWN BY JHR
DATE APRIL 2008 CHECKED BY CLS