Bench Mark #2:
Iron Bar Set. Sta. 178+37.62. 19.16' Lt.
Elevation = 709.69

Existing Structure: S.N. 027-0040, Built in 1929 as a ±30' Single Span R.C. Slab Bridge 36'-3" Wide (Out to Out) With Closed Concrete Abutments Supported on Untreated Timber Piles.
Bridge Shall be Closed to Traffic During Reconstruction.

No Salvage

STATE OF ILLINOIS
DEPARTMENT OF TRANSPORTATION

ROUTE NO.	SECTION	COUNTY	TOTAL SHEETS	SHEET NO.
FAP 798	107 BR-1	FORD	92	80
FED. ROAD DIST. NO. 7	ILLINOIS	FED. AID PROJECT-		

SHEET NO. 1
8 SHEETS

Contract # 66-698

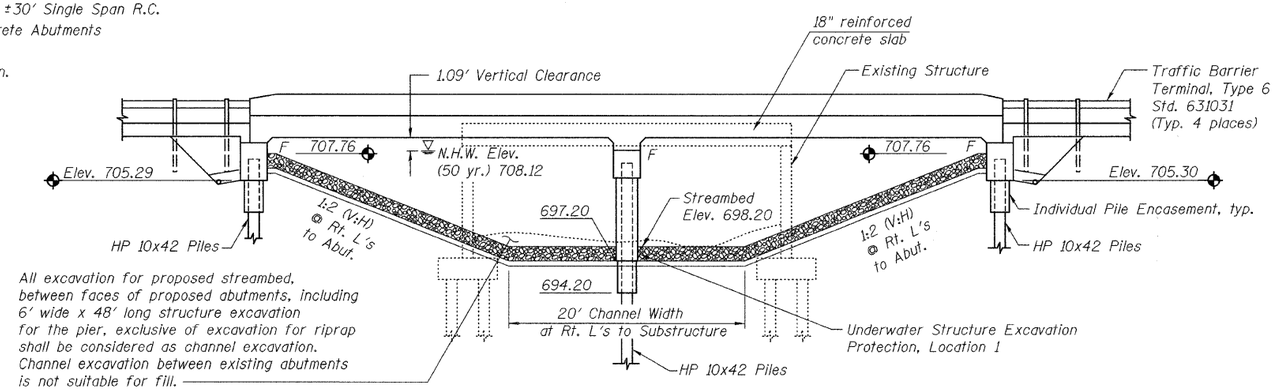

ELEVATION

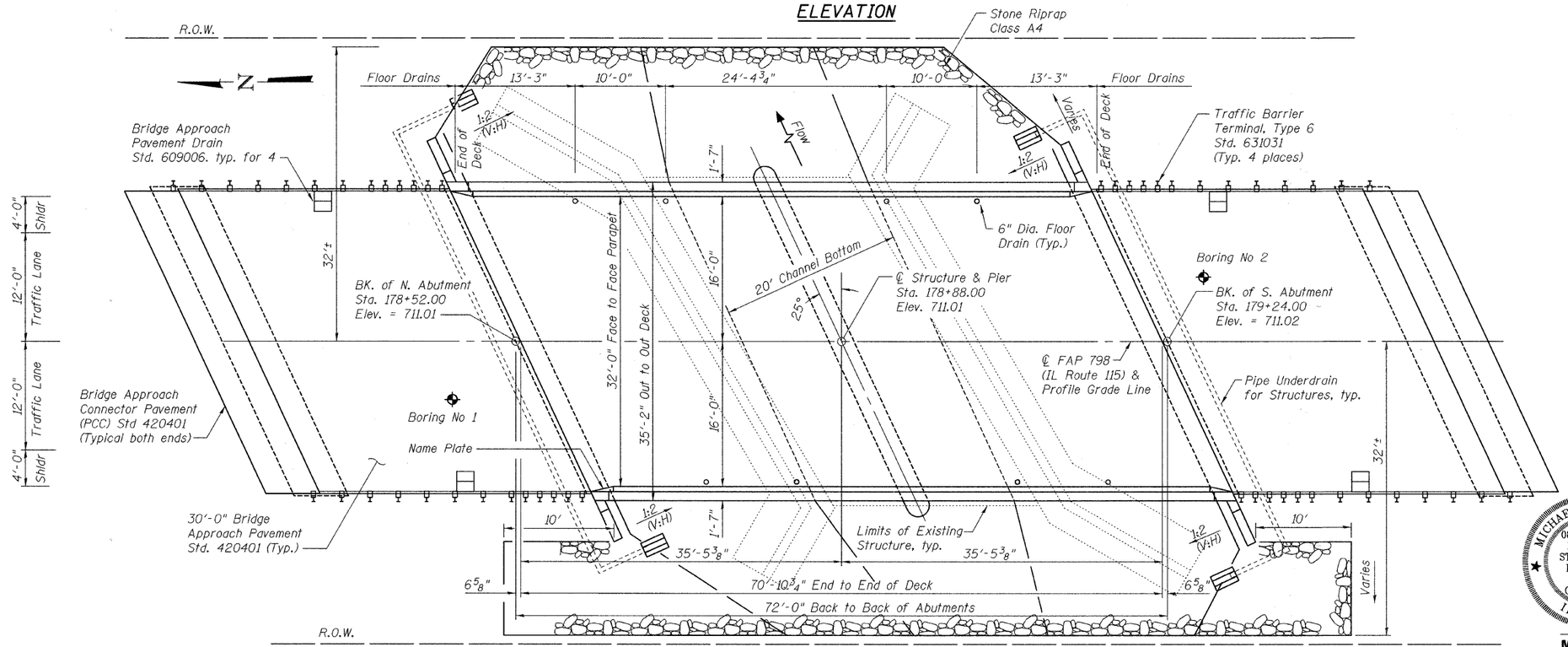

PLAN

INDEX OF SHEETS

1. General Plan & Elevation
2. General Notes, Details & Bill of Materials
3. Superstructure - Deck
4. Superstructure - Details
5. Subtructure - Abutments
6. Substructure - Pier
7. Soil Borings
8. Soil Borings

STATION 178+88.00
BUILT 20-- BY
STATE OF ILLINOIS
FAP RTE 798 SEC 107 BR-1
LOADING HS20-44
STR. NO. 027-0095

LETTERING FOR NAME PLATE

Locate Name Plate at Northwest Corner of Bridge (See Std. 515001)

DESIGN SPECIFICATIONS

2002 AASHTO

LOADING HS20-44

Allow 50#/sq. ft. for future wearing surface.

SEISMIC DATA

Seismic Performance Category (SPC) = A
Bedrock Acceleration Coefficient (A) = 0.045 g
Site Coefficient (S) = 1.2

DESIGN STRESSES

FIELD UNITS

f'_c = 3,500 psi
f_y = 60,000 psi (Reinforcement)

APPROVED
FOR STRUCTURAL ADEQUACY ONLY
Ralph E. Anderson (TJD)
ENGINEER OF BRIDGES AND STRUCTURES

MICHAEL J. BRYANT 081-005324 LICENSED STRUCTURAL ENGINEER OF CHAMPAIGN ILLINOIS

5/26/06
DATE

MICHAEL J. BRYANT, P.E., S.E.
IL. LICENSED STRUCTURAL ENGINEER
ILLINOIS NO. 5324 EXPIRES NOVEMBER 30, 2006

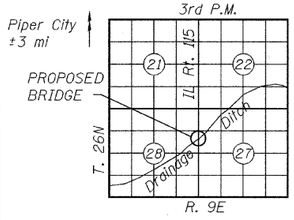

LOCATION SKETCH

DESIGNED	MAJ/MSJ
CHECKED	MJB
DRAWN	MSJ
CHECKED	WCC

WATERWAY INFORMATION

Drainage Area = 6.2 mi² Low Grade Elev. 710.76 ft. @ Sta. 182+00

	Freq. Yr.	Q C.F.S.	Opening Sq. Ft. Exist.	Opening Sq. Ft. Prop.	Nat. H.W.E.	Head-Ft. Exist.	Head-Ft. Prop.	Headwater El. Exist.	Headwater El. Prop.
	10	896	185	280	706.63	0.24	0.06	706.87	706.69
Design	50	1,353	219	356	708.12	0.58	0.14	708.70	708.26
Base	100	1,543	222	372	708.40	1.13	0.19	709.53	708.59
Max. Calc.	500	1,988	222	389	708.68	1.99	0.33	710.67	709.01

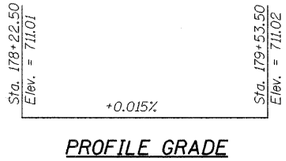

PROFILE GRADE

(along ℄ roadway)

GENERAL PLAN & ELEVATION
IL RTE 115 OVER DRAINAGE DITCH
TRIBUTARY TO NORTH VERMILLION RIVER
FAP RTE 798 SECTION 107 BR-1
FORD COUNTY
STATION 178+88.00
S.N. 027-0095

Prepared by FOTH & VAN DYKE ASSOCIATES, INC.

FVD/DA Job 308.29