CONTRACT NO. 76A34

F.A.P RTE.	SECTION	COUNTY	TOTAL SHEETS	SHEET NO.
609	***	ST. CLAIR	350	11
STA.		TO STA.		
FED. ROAD DIST. NO.	ILLINOIS	FED. AID PROJECT		

***76RS-3, 76-2BR-21

DESIGN		
INT.	DATE	REASON

PLOTS & CHECKS			
INT.	DATE	NO.	REASON

CHECKS		
INT.	DATE	REASON

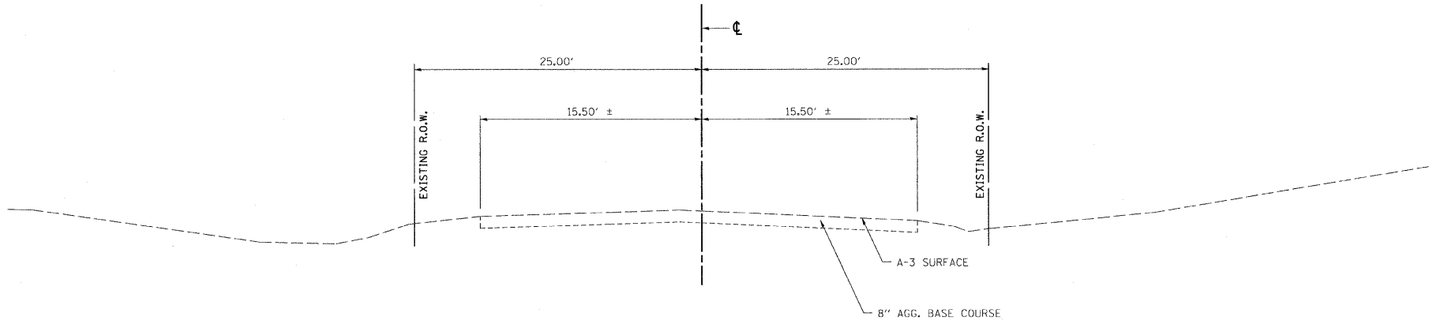

EXISTING TYPICAL SECTION

℄ MINE HAUL ROAD
℄ ZINGG ROAD
℄ LAKE LANE

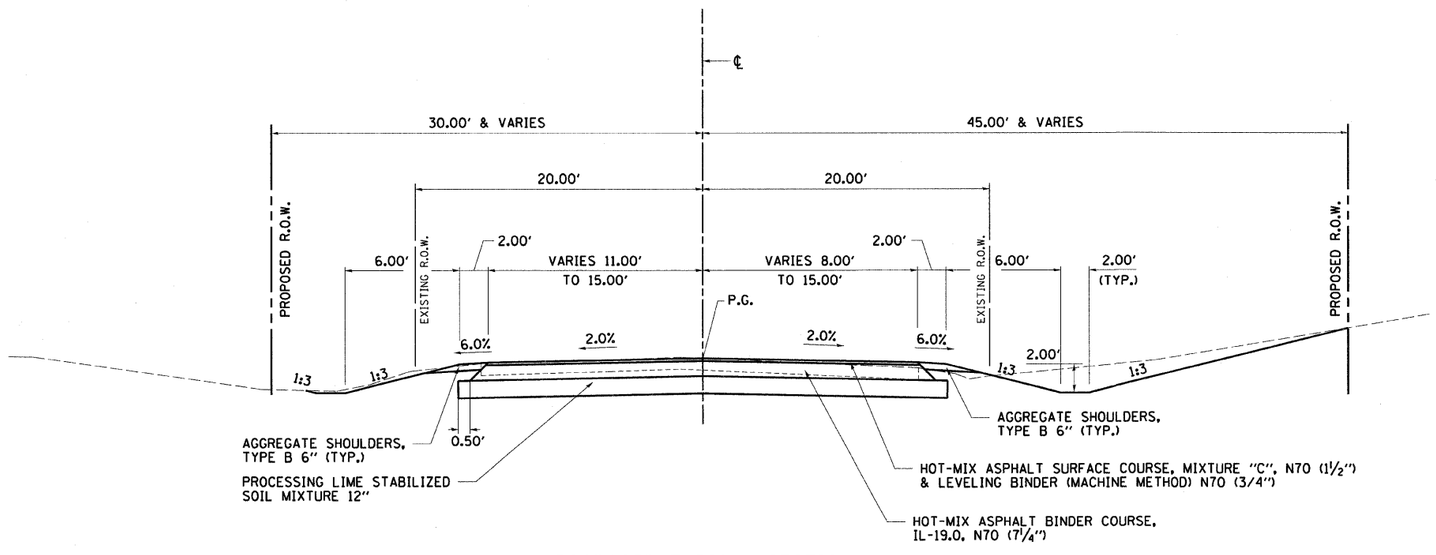

PROPOSED TYPICAL SECTION

℄ MINE HAUL ROAD
℄ ZINGG ROAD
℄ LAKE LANE
TRANSITION FROM STA. 598+06.49 TO STA. 599+06.49
TRANSITION FROM STA. 600+88.38 TO STA. 601+88.34

REVISIONS	
NAME	DATE
IDOT REVIEW	MAR/08

ILLINOIS DEPARTMENT OF TRANSPORTATION

TYPICAL SECTIONS

FAP 609 (IL RTE. 163)
SECTION 76RS-3, 76-2BR-21
ST. CLAIR COUNTY

SCALE: VERT. HORIZ.
DATE: 11/25/02

DRAWN BY: VERENSKI
DESIGNED BY: BOTT
CHECKED BY: EMRICK

GREENE & BRADFORD, INC. (OF SPRINGFIELD)
CONSULTING ENGINEERS
RD/CONSTRUCTION SERVS.
SPRINGFIELD, ILLINOIS 62703
PROFESSIONAL DESIGN FIRM NO. 184-000179
CIVIL/SOIL & STRUCTURAL ENGINEERING CORPORATION
(217) 793-8554, (217) 793-8237 FX, E-MAIL - CORDS@GANDBCONSULTS.BIZ-SUCSN

COMPUTER FILE NO. TYP_07_V8
PROJECT 02076
05/30/07-FAV

IDOTPL50 1"=50' 8/24/98

TYPICALS - FAP 609 (IL RTE. 163) ST. CLAIR COUNTY