CONTRACT NO. 98542

F.A.S. RTE	SECTION	COUNTY	TOTAL SHEETS	SHEET NO
932	(8,9,11)W,RS-1	*	401	186
STA.		TO STA.		
FED. ROAD DIST. NO.		ILLINOIS	FED. AID PROJECT	

* JOHNSON/POPE

STATE OF ILLINOIS

DEPARTMENT OF TRANSPORTATION

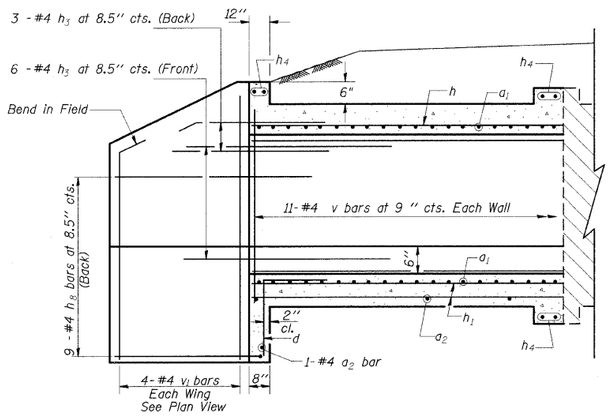

HALF LONG. SECTION

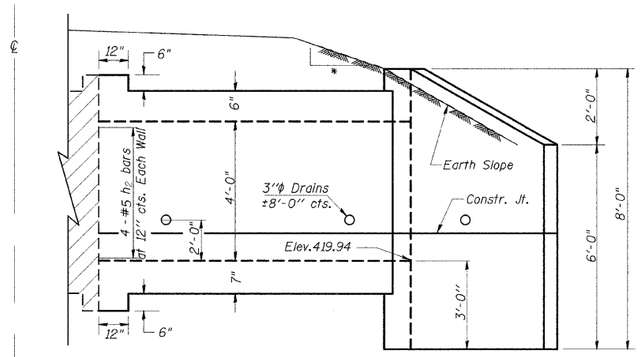

HALF ELEVATION

* 4:1 TO CLEAR ZONE
3:1 AFTER CLEAR ZONE

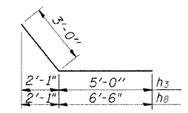

BARS h_3 & h_8

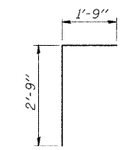

BAR d

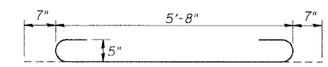

BAR a_1

DESIGN STRESSES

fy = 60,000 psi

f'c = 3,500 psi

LOADING HS 20-44 & ALT.

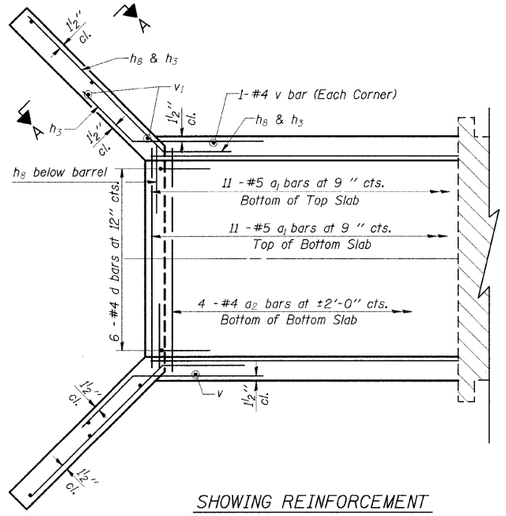

SHOWING REINFORCEMENT

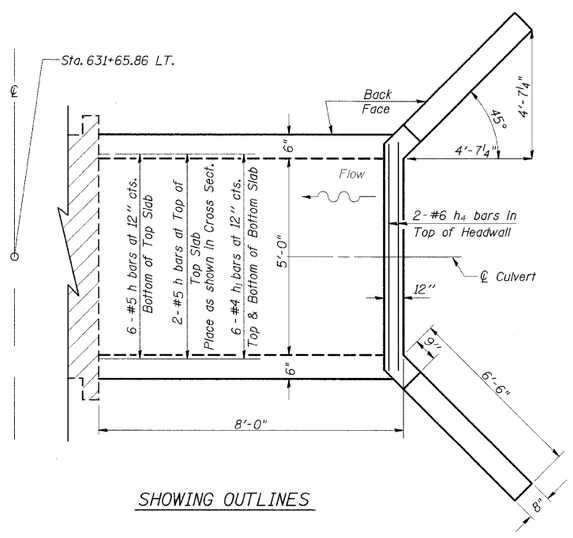

SHOWING OUTLINES

PLAN

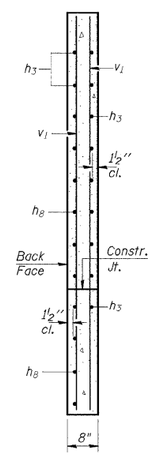

SECTION A-A

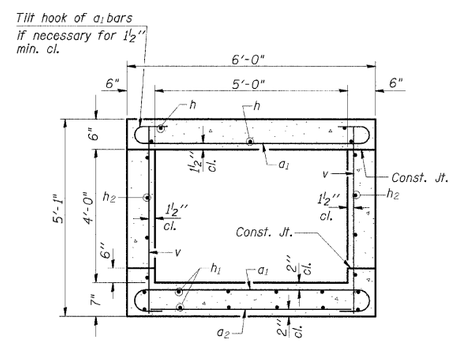

SECTION THRU BARREL

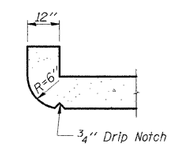

SECTION THRU HEADWALL

(Up Stream End Only)

BILL OF MATERIAL

Bar	No.	Size	Length	Shape
a_1	22	#5	6'-10"	
a_2	5	#4	5'-3"	
d	6	#4	4'-6"	
h	8	#5	7'-9"	
h_1	12	#4	7'-9"	
h_2	8	#5	7'-9"	
h_3	9	#4	8'-0"	
h_4	6	#6	5'-2"	
h_8	9	#4	9'-6"	
v	24	#4	4'-9"	
v_1	8	#4	7'-7"	
Expansion Bolts ¾"			Each	14
Concrete Box Culverts			Cu. Yd.	6.0
Reinforcement Bars			Pound	660

PRECAST OPTION NOT ALLOWED

LEGEND

Existing Culvert

NOTES

A distance of half the length of the wingwall but not less than six feet of the barrel shall be poured monolithically with the wingwalls.

Reinforcement Bars shall conform to the requirements of AASHTO M-31, M-42 or M-53, Grade 60.

Bars indicated thus 12 x 4-#5 etc. indicates 12 lines of bars with 4 lengths per line.

All construction joints shall be bonded.

ILLINOIS DEPARTMENT OF TRANSPORTATION

BOX CULVERT EXTENSION

STATION 631+65.86 LT.

5' X 4', SKEW 0°

EXTEND 8'-0"

DATE-TIME
CON-SPEC

SSB-H-0 6-1-2000