11-07-2025 LETTING ITEM 060

F.A.S. RTE.	SECTION	COUNTY	TOTAL SHEETS	SHEET NO.
1707	(FXX-B)B	CUMBERLAND	80	1
		ILLINOIS	CONTRACT NO. 74595	

STATE OF ILLINOIS
DEPARTMENT OF TRANSPORTATION

D-97-058-12

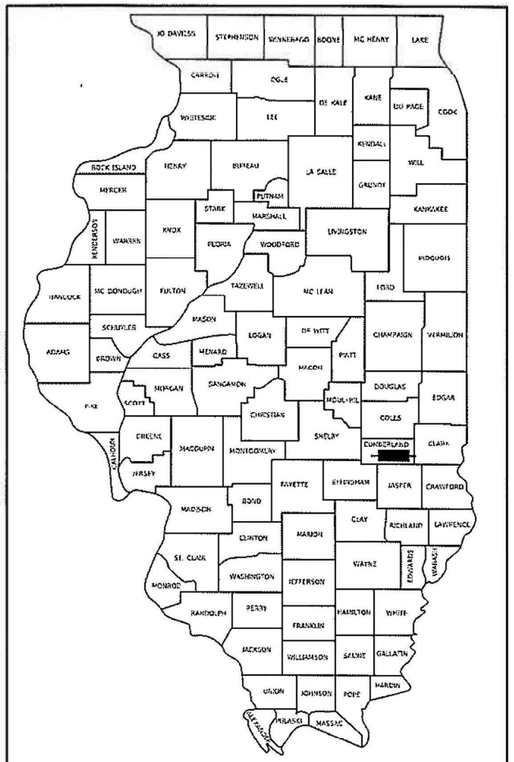

LOCATION OF SECTION INDICATED THUS:-

FOR INDEX OF SHEETS, SEE SHEET NO. 2

ADT = 1800 (2023)

PROPOSED HIGHWAY PLANS

F.A.S. ROUTE 1707
(US 40 OVER EMBARRAS RIVER)
SECTION (FXX-B)B
PROJECT BR-WI7A(698)
BRIDGE REPLACEMENT
CUMBERLAND COUNTY
C-97-125-12

R 9 E 3RD PM

PROPOSED STRUCTURE REPLACEMENT
EX. SN 018-0008
PR. SN 018-0068

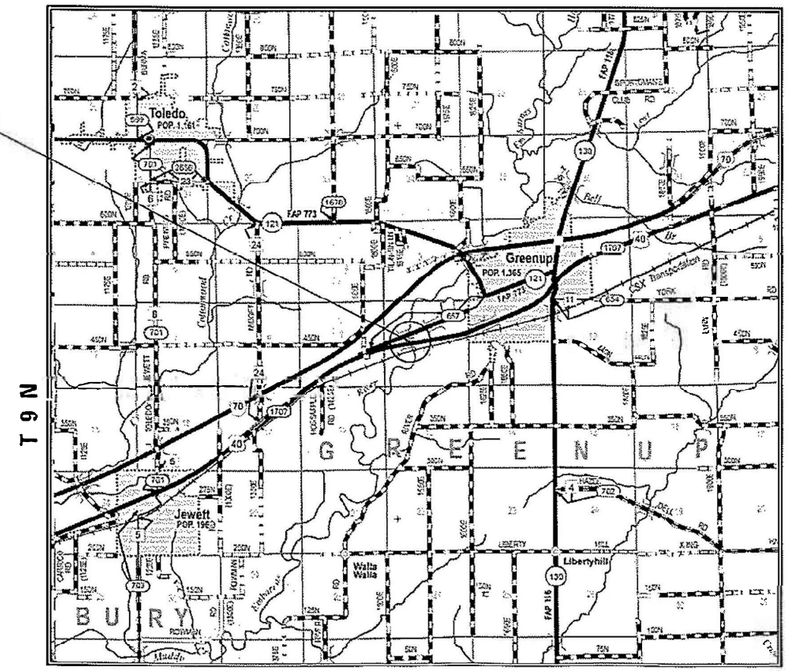

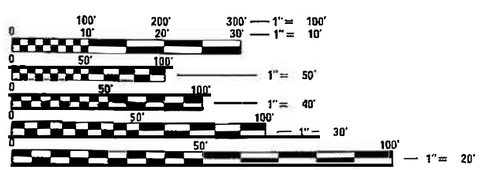

FULL SIZE PLANS HAVE BEEN PREPARED USING STANDARD ENGINEERING SCALES. REDUCED SIZED PLANS WILL NOT CONFORM TO STANDARD SCALES. IN MAKING MEASUREMENTS ON REDUCED PLANS, THE ABOVE SCALES MAY BE USED.

J.U.L.I.E.
JOINT UTILITY LOCATION INFORMATION FOR EXCAVATORS
1-800-892-0123
OR 811

PROJECT ENGINEER : MATT BOWER
PROJECT MANAGER : HERMANN & ASSOCIATES
PHONE : (217)-342-8361

CONTRACT NO. 74595

GROSS LENGTH = 1255.7 FT. = 0.238 MILE
NET LENGTH = 1255.7 FT. = 0.238 MILE

N.T.S

ALICIA M. HERMANN 062-058326 LICENSED PROFESSIONAL ENGINEER OF ILLINOIS

Alicia M Hermann

ALICIA M. HERMANN, P.E.
ILLINOIS REGISTERED ENGINEER NO. 062.058326
REGISTRATION EXPIRES 11/30/2025

STATE OF ILLINOIS
DEPARTMENT OF TRANSPORTATION

SUBMITTED August 13 20 25
Teresa C Paciello
REGIONAL ENGINEER

October 3 20 25
ENGINEER OF DESIGN AND ENVIRONMENT

October 3 20 25
DIRECTOR OF HIGHWAYS PROJECT IMPLEMENTATION

PRINTED BY THE AUTHORITY OF THE STATE OF ILLINOIS

REV - MS

INDEX OF SHEETS

HIGHWAY STANDARDS

THE FOLLOWING STANDARDS ARE A PART OF THESE PLANS AND ARE INCLUDED FOLLOWING THE LAST NUMBERED SHEET OF THE PLANS.

STD. NO.	DESCRIPTION
000001-08	STANDARD SYMBOLS, ABBREVIATIONS, AND PATTERNS
001001-02	AREAS OF REINFORCEMENT BARS
001006	DECIMAL OF AN INCH AND OF A FOOT
280001-07	TEMPORARY EROSION CONTROL SYSTEMS
420406	PAVEMENT CONNECTOR (HMA) FOR BRIDGE APPROACH SLAB
482001-02	HMA SHOULDER ADJACENT TO FLEXIBLE PAVEMENT
515001-04	NAME PLATE FOR BRIDGES
601101-02	CONCRETE HEADWALL FOR PIPE UNDERDRAINS
630001-13	STEEL PLATE BEAM GUARDRAIL
630201-07	PCC/HMA STABILIZATION AT STEEL PLATE BEAM GUARDRAIL
630301-09	SHOULDER WIDENING FOR TYPE 1 (SPECIAL) GUARDRAIL TERMINALS
631031-18	TRAFFIC BARRIER TERMINAL, TYPE 6
667101-02	PERMANENT SURVEY MARKERS
668001-01	U.S. GEOLOGICAL SURVEY AND NATIONAL GEODETIC SURVEY BENCHMARKS, RESETTING METHOD
701001-02	OFF-ROAD OPERATIONS, 2L, 2W, MORE THAN 15' AWAY
701006-05	OFF-RD OPERATIONS, 2L, 2W, 15' TO 24" FROM PAVEMENT EDGE
701201-05	LANE CLOSURE, 2L, 2W, DAY ONLY, FOR SPEEDS >=45 MPH
701311 03	LANE CLOSURE, 2L, 2W, MOVING OPERATIONS - DAY ONLY
701901-10	TRAFFIC CONTROL DEVICES
720001-01	SIGN PANEL MOUNTING DETAILS
720006-04	SIGN PANEL ERECTION DETAILS
720011-01	METAL POSTS FOR SIGNS, MARKERS, DELINEATORS
725001-01	OBJECT AND TERMINAL MARKERS
728001-01	TELESCOPING STEEL SIGN SUPPORT
781001-04	TYPICAL APPLICATIONS RAISED REFLECTIVE PAVEMENT MARKERS
780001-05	TYPICAL PAVEMENT MARKINGS
782006-01	GUARDRAIL AND BARRIER WALL REFLECTOR MOUNTING DETAILS
BLR 21-9	TYPICAL APPLICATION OF TRAFFIC CONTROL DEVICES FOR CONSTRUCTION ON RURAL LOCAL HIGHWAYS

MIXTURE REQUIREMENTS

THE FOLLOWING MIXTURE REQUIREMENTS ARE APPLICABLE TO THIS PROJECT:

LOCATION(S)	MIXTURE USE(S)	PG	DESIGN AIR VOIDS	MIXTURE COMPOSITION	FRICTION AGGREGATE	MIXTURE WEIGHT	QUALITY MANAGEMENT PROGRAM	SUBLOT SIZE	MATERIAL TRANSFER DEVICE (REQUIRED?)
U.S. ROUTE 40 MAINLINE	HMA SURFACE COURSE, IL-9.5, MIX "C", N70 (2")	PG 64-22	4.0% @ N=70	IL - 9.5	MIXTURE C	N70	QC/QA	N/A	N/A
U.S. ROUTE 40 MAINLINE	HMA BINDER COURSE, IL-19.0, N70 (VARIABLE DEPTH)	PG 64-22	4.0% @ N=70	IL - 19.0	N/A	N70	QC/QA	N/A	N/A
U.S. ROUTE 40 MAINLINE	HMA BINDER COURSE, IL-19.0, N70 (9")	PG 64-22	4.0% @ N=70	IL - 19.0	N/A	N70	QC/QA	N/A	N/A
HMA SHOULDERS 8" (TOP LIFT)	HMA SURFACE COURSE, IL-9.5, MIX "C", N70	PG 64-22	4.0% @ N=70	IL - 9.5	MIXTURE C	N70	QC/QA	N/A	N/A
HMA SHOULDERS 8" (BOTTOM LIFT)	HMA BINDER COURSE, IL-19.0, N70	PG 64-22	4.0% @ N=70	IL - 19.0	N/A	N70	QC/QA	N/A	N/A

APPLICATION RATES

THE FOLLOWING APPLICATION RATES WERE USED IN CALCULATING PLAN QUANTITIES AND HAVE BEEN INCLUDED FOR REFERENCE:

BITUMINOUS MATERIALS (PRIME COAT)	0.25 LB/SQ FT (ON GRANULAR BASE)
BITUMINOUS MATERIALS (TACK COAT)	0.05 LB/SQ FT (ON MILLED SURFACES)
	0.025 LB/SQ FT (BETWEEN HMA LIFTS)
HOT-MIX ASPHALT BINDERS AND SURFACES	112 LB/SQ YD/INCH

GENERAL NOTES

PAINT PAVEMENT MARKING LINE - 4" SHALL BE CONSTRUCTED IN ACCORDANCE WITH THE STANDARDS, AS SHOWN IN THE PLANS, AND AS DETERMINED BY THE ENGINEER. THE TOTAL QUANTITY CALCULATED CONSISTS OF 2511 FEET OF WHITE AND 314 FEET OF YELLOW.

ALL ELEVATIONS SHOWN IN THE PLANS ARE BASED ON U.S.G.S. DATUM.

PIPE DRAINS, 4" SHALL BE ATTACHED TO PIPE UNDERDRAINS FOR STRUCTURES AND SHALL EXTEND TO THE BOTTOM OF THE EMBANKMENT AND TERMINATE WITH A CONCRETE HEADWALL.

THE LOCATIONS AND DEPTHS OF UNDERGROUND UTILITIES SHOWN HAVE BEEN TAKEN FROM INFORMATION FURNISHED BY THE UTILITY OWNERS AND MUST BE CONSIDERED APPROXIMATE. FIELD MARKINGS OF UTILITIES IN CRITICAL AREAS MAY BE OBTAINED BY PROVIDING A MINIMUM OF 96 HOURS ADVANCE NOTICE THROUGH THE J.U.L.I.E. SYSTEM.

A TYPE III CAST IN PLACE PERMANENT SURVEY MARKER SHALL BE PLACED NEAR THE PROPOSED STRUCTURE. THE TABLET STYLE SHALL CONFORM TO STANDARD 667101-01 AND THE CAST IN PLACE BASE WILL CONFORM TO STANDARD 668001-01. THE LOCATION OF THE SURVEY MARKER SHALL BE DETERMINED BY THE ENGINEER AND THE CHIEF OF SURVEYS.

THE EXISTING PERMANENT SURVEY MARKER LOCATED ON TOP OF THE SOUTH END OF THE EAST ABUTMENT IS A NGS BENCHMARK. THE DISK SHALL BE SAVED DURING THE DEMOLITION OF THE BRIDGE AND RETURNED TO THE CHIEF OF SURVEYS, BRIAN STIRRETT (1-217-342-8319).

THE LOCATION OF THE PERMANENT SURVEY MARKER, TYPE I ON THE NEW BRIDGE SHALL BE DETERMINED BY THE RESIDENT ENGINEER.

COMMITMENTS

IN ORDER TO PROTECT THE EMBARRAS RIVER INAI AND ILLINOIS THREATENED ESD, THE FOLLOWING COMMITMENTS SHALL APPLY:

ANY REQUIRED NIGHT LIGHTING SHOULD FOLLOW INTERNATIONAL DARK-SKY ASSOCIATION (IDA) GUIDANCE TO MINIMIZE THE EFFECT OF LIGHT POLLUTION ON WILDLIFE.

WILDLIFE-FRIENDLY PLASTIC-FREE EROSION CONTROL BLANKET SHALL BE USED IN ACCORDANCE WITH THE BDE SPECIAL PROVISION EROSION CONTROL BLANKET TO PREVENT THE ENTANGLEMENT OF NATIVE WILDLIFE. IF WILDLIFE-FRIENDLY PLASTIC-FREE BLANKET CANNOT BE USED, THEN THE PLASTIC EROSION CONTROL BLANKET SHOULD BE REMOVED ONCE VEGETATION IS ESTABLISHED.

GOOD HOUSEKEEPING PRACTICES SHOULD BE IMPLEMENTED AND MAINTAINED DURING AND AFTER CONSTRUCTION TO PREVENT TRASH AND OTHER DEBRIS FROM INADVERTENTLY BLOWING OR WASHING INTO THE EMBARRAS RIVER OR NEARBY NATURAL AREAS.

THE PROJECT FOOTPRINT AND IN-STREAM ACTIVITIES SHALL BE LIMITED TO WHAT IS NECESSARY TO COMPLETE THE PROPOSED PROJECT. ALL WORK AND CONSTRUCTION ACTIVITIES SHALL BE CONTAINED WITHIN AND SHALL NOT EXTEND BEYOND THE PROJECT'S ENVIRONMENTAL SURVEY REQUEST (ESR) LIMITS.

WHERE FEASIBLE, THE CONTRACTOR SHALL LIMIT IN STREAM WORK AND WORK SHALL BE CONDUCTED FROM THE BANK.

COMMITMENTS CONTINUED:

THE NORMAL FLOW OF THE RIVER SHALL BE MAINTAINED AT ALL TIMES. FLOODPLAIN MORPHOLOGY CHANGES WILL BE MINIMIZED TO THE EXTENT PRACTICAL BY USING CULVERTS WITHIN THE CAUSEWAYS.

IN ACCORDANCE WITH 281.04 A), RIPRAP OF ANY KIND SHALL NOT BE PLACED OR DROPPED FROM A HEIGHT OF MORE THAN 1 FOOT.

THE USE OF EXPLOSIVES FOR DEMOLITION AND CONSTRUCTION ACTIVITIES SHALL BE PROHIBITED OR CONDUCT DEMOLITION WORK IN A MANNER THAT WILL PREVENT DEBRIS FROM FALLING IN THE RIVER.

DURING DEMOLITION, THE SUPERSTRUCTURE SHALL NOT BE DROPPED INTO THE RIVER TO PREVENT CRUSHING FISH.

THE CONTRACTOR SHALL BE RESPONSIBLE FOR IMPLEMENTING MEASURES TO PREVENT DEBRIS FROM FALLING IN THE RIVER TO PREVENT GROUNDING OR CRUSHING FISH WHICH MIGHT BE UTILIZING SUITABLE HABITAT WITHIN THE PROJECT FOOTPRINT. DEBRIS WILL NOT BE ALLOWED TO COLLECT AT THE BOTTOM OF THE RIVER. THE CONTRACTOR SHALL REMOVE ANY DEBRIS FROM THE WATER OR RIVERBED AS SOON AS PRACTICABLE DURING THE SAME WORKDAY TO PREVENT THE ACCUMULATION OF POTENTIALLY POLLUTED MATERIALS.

SILT FENCE PERIMETER EROSION BARRIER SHALL BE INSTALLED AROUND THE CONSTRUCTION LIMITS IN ACCORDANCE WITH SECTION 280 AND ARTICLE 1080.02 OF IDOT'S STANDARD SPECIFICATION FOR ROAD AND BRIDGE CONSTRUCTION.

AREAS WHERE VEGETATION HAS BEEN DISTURBED SHALL BE RESEEDED. AREAS WHICH ARE NOT WITHIN THE SAFETY STRIP SHALL BE RE-SEEDED WITH IDOT CLASS 4 AND 5 NATIVE GRASS AND FORB MIXES AS OUTLINED IN SECTION 250 OF IDOT STANDARD SPECIFICATIONS FOR ROAD AND BRIDGE CONSTRUCTION.

REFER STORMWATER POLLUTION PREVENTION PLAN (SWPPP) FOR SPILL AVOIDANCE/ REMEDIATION PLAN TO PREVENT HAZARDOUS MATERIALS (E.G., PETROLEUM PRODUCTS, SOLVENTS, PAINTS, ETC.) FROM ENTERING THE EMBARRAS RIVER, OR CONTAMINATING SOILS OR WATERS WITHIN THE WATERSHED.

LOCATE ALL STAGING AREAS FOR CONSTRUCTION VEHICLES AND EQUIPMENT ON APPROPRIATE WORK PADS AWAY FROM THE EMBARRAS RIVER. FUELING AND FUEL STORAGE AREAS SHALL BE LOCATED AT LEAST 150 FEET AWAY FROM THE EMBARRAS RIVER.

ONLY CLEAN MATERIALS SHOULD BE USED DURING CONSTRUCTION AND ANY CONSTRUCTION AND DEMOLITION DEBRIS, OR WASTE SHOULD BE STOCKPILED AWAY FROM THE EMBARRAS RIVER AND REMOVED UPON COMPLETION OF THE PROJECT.

ANY CONSTRUCTION EQUIPMENT USED ON-SITE WILL BE POWER WASHED TO REMOVE ANY MUD, CONTAMINANTS, OR INVASIVE SPECIES PRIOR TO ARRIVING AT THE PROJECT SITE. ANY EQUIPMENT USED IN THE RIVER SHALL BE INSPECTED DAILY FOR LEAKS OF POTENTIALLY TOXIC MATERIALS INCLUDING FUELS, LUBRICANTS, OILS, ETC. ANY FLUIDS FOUND DURING THESE INSPECTIONS SHALL BE IMMEDIATELY CONTAINED IN ACCORDANCE WITH APPLICABLE REGULATIONS, AND THE EQUIPMENT SHALL BE REPAIRED PRIOR TO FURTHER USE ON THE SITE.

NOTIFICATION TO ALL ON-SITE PERSONNEL SHALL BE PROVIDED ON THE STATE LISTED FISH EASTERN SAND DARTER. EDUCATION MATERIALS WILL BE PROVIDED TO THE CONTRACTOR AT THE PRECONSTRUCTION MEETING IDENTIFYING THE LISTED SPECIES WHICH OCCUR IN THE PROJECT VICINITY, WHERE THEY ARE MOST LIKELY TO BE ENCOUNTERED.

CONTRACTORS WILL BE MADE AWARE OF THE POTENTIAL PRESENCE OF THE LISTED SPECIES IN THE PROJECT AREA AND THE SPECIAL PROVISIONS INCLUDED IN THE CONTRACT WHICH ARE NECESSARY TO PROTECT THEM.

THE PROJECT IS WITHIN THE SCOPE OF THE PROGRAMMATIC BIOLOGICAL OPINION AND THE PROJECT IS NOT LIKELY TO ADVERSELY AFFECT THE NLEB OR I BAT PROVIDED THE FOLLOWING CONSERVATION MEASURES ARE IMPLEMENTED:

TREES THREE (3) INCHES IN DIAMETER AT BREAST HEIGHT OR LARGER SHALL NOT BE CLEARED FROM APRIL 1ST THROUGH SEPTEMBER 30TH OF ANY GIVEN YEAR.

NO TREE CLEARING BEYOND 100 FEET OF THE EDGE OF PAVEMENT OR RAILROAD WILL OCCUR.

ALL TREES CLEARED SHALL BE REPLACED AT A 1:1 RATIO IN ACCORDANCE WITH IDOT DESIGN & ENVIRONMENT 18.

SHOULD THE PROJECT REQUIRE TEMPORARY OR PERMANENT LIGHTING, ALL LIGHTING SHALL BE INSTALLED IN ACCORDANCE WITH FEDERAL HIGHWAY ADMINISTRATION GUIDE FOR BATS WHICH RECOMMENDS THAT LIGHTING DOES NOT INCREASE ILLUMINATION ABOVE AMBIENT CONDITIONS AND THAT INCORPORATES FULL CUT OFF, DOWNWARD FACING LIGHTS DIRECTED AWAY FROM FORESTED AREAS.

SUMMARY OF QUANTITIES

SP. ITEM	CODE NO.	PAY ITEM	UNIT	TOTAL QUANTITIES	CONSTRUCTION TYPE CODE 0010		
					80 % FEDERAL		
					20% STATE		
	20100110	TREE REMOVAL (6-15 UNITS DIAMETER)	UNIT	94	94		
	20100210	TREE REMOVAL (OVER 15 UNITS DIAMETER)	UNIT	42	42		
	20200100	EARTH EXCAVATION	CU YD	415	415		
	20300100	CHANNEL EXCAVATION	CU YD	2476	2476		
	20400800	FURNISHED EXCAVATION	CU YD	2200	2200		
	20700110	POROUS GRANULAR EMBANKMENT	TONS	103	103		
	21101615	TOPSOIL FURNISH & PLACE, 4"	SQ YD	5071	5071		
	25000310	SEEDING, CLASS 4	ACRE	1	1		
	25000400	NITROGEN FERTILIZER NUTRIENT	POUND	96	96		
	25000500	PHOSPHORUS FERTILIZER NUTRIENT	POUND	96	96		
	25000600	POTASSIUM FERTILIZER NUTRIENT	POUND	96	96		
	25000700	AGRICULTURAL GROUND LIMESTONE	TON	5.3	5.3		
	25100645	WILDLIFE FRIENDLY EROSION CONTROL BLANKET	SQ YD	5078	5078		
	28000250	TEMPORARY EROSION CONTROL SEEDING	POUND	106	106		
	28000305	TEMPORARY DITCH CHECKS	FOOT	84	84		
	28000400	PERIMETER EROSION BARRIER	FOOT	2539	2539		
	28000510	INLET FILTERS	EACH	1	1		
	28100107	STONE RIPRAP, CLASS A4	SQ YD	210	210		
	28100109	STONE RIPRAP, CLASS A5	SQ YD	1845	1845		
	28200200	FILTER FABRIC	SQ YD	2149	2149		

SUMMARY OF QUANTITIES

SP. ITEM	CODE NO.	PAY ITEM	UNIT	TOTAL QUANTITIES	CONSTRUCTION TYPE CODE 0010		
					80 % FEDERAL		
					20% STATE		
	31102100	SUBBASE GRANULAR MATERIAL, TYPE C 4"	SQ YD	1007	1007		
	35102400	AGGREGATE BASE COURSE, TYPE B 12"	SQ YD	514	514		
	40200800	AGGREGATE SURFACE COURSE, TYPE B	TON	16	16		
	40600275	BITUMINOUS MATERIALS (PRIME COAT)	POUND	1609	1609		
	40600290	BITUMINOUS MATERIALS (TACK COAT)	POUND	1277	1277		
	40603085	HOT-MIX ASPHALT BINDER COURSE, IL-19.0, N70	TON	481	481		
	40604052	HOT-MIX ASPHALT SURFACE COURSE, IL-9.5, MIX "C", N70	TON	207	207		
	42000070	PAVEMENT CONNECTOR (HMA) FOR BRIDGE APPROACH SLAB	SQ YD	85	85		
	44000100	PAVEMENT REMOVAL	SQ YD	141	141		
	44000151	HOT-MIX ASPHALT SURFACE REMOVAL, 1/2"	SQ YD	516	516		
	44000200	DRIVEWAY PAVEMENT REMOVAL	SQ YD	59	59		
	44000500	COMBINATION CURB AND GUTTER REMOVAL	FOOT	344	344		
	44004250	PAVED SHOULDER REMOVAL	SQ YD	20	20		
	48203029	HOT-MIX ASPHALT SHOULDERS, 8"	SQ YD	1007	1007		
	48101600	AGGREGATE SHOULDERS, TYPE B 8"	SQ YD	602	602		
	50100100	REMOVAL OF EXISTING STRUCTURES	EACH	1	1		
	50200100	STRUCTURE EXCAVATION	CU YD	269	269		
	50300225	CONCRETE STRUCTURES	CU YD	285	285		
	50300255	CONCRETE SUPERSTRUCTURE	CU YD	624	624		
	50300300	PROTECTIVE COAT	SQ YD	2380	2380		

SUMMARY OF QUANTITIES

SP. ITEM	CODE NO.	PAY ITEM	UNIT	TOTAL QUANTITIES	CONSTRUCTION TYPE CODE 0010		
					80 % FEDERAL		
					20% STATE		
	50500105	FURNISHING AND ERECTING STRUCTURAL STEEL	L SUM	1	1		
	50500505	STUD SHEAR CONNECTORS	EACH	6840	6840		
	50800205	REINFORCEMENT BARS, EPOXY COATED	POUND	278340	278340		
	50800515	BAR SPLICERS	EACH	400	400		
	50800530	MECHANICAL SPLICERS	EACH	198	198		
	51201900	FURNISHING STEEL PILES HP14X89	FOOT	540	540		
	51202305	DRIVING PILES	FOOT	540	540		
	51203900	TEST PILE STEEL HP14X89	EACH	2	2		
	51500100	NAME PLATES	EACH	1	1		
	51602000	PERMANENT CASING	FOOT	114	114		
	51603000	DRILLED SHAFT IN SOIL	CU YD	207.6	207.6		
	51604000	DRILLED SHAFT IN ROCK	CU YD	58.1	58.1		
	52000110	PREFORMED JOINT STRIP SEAL	FOOT	68	68		
	52100010	ELASTOMERIC BEARING ASSEMBLY, TYPE I	EACH	18	18		
	52100520	ANCHOR BOLTS, 1"	EACH	24	24		
	52100540	ANCHOR BOLTS, 1 1/2"	EACH	36	36		
	55100500	STORM SEWER REMOVAL, 12"	FOOT	77	77		
	58600101	GRANULAR BACKFILL FOR STRUCTURES	CU YD	153	153		
	60146304	PIPE UNDERDRAINS FOR STRUCTURES 4"	FOOT	147	147		
	60500060	REMOVING INLETS	EACH	2	2		

SUMMARY OF QUANTITIES

SP. ITEM	CODE NO.	PAY ITEM	UNIT	TOTAL QUANTITIES	CONSTRUCTION TYPE CODE 0010		
					80 % FEDERAL		
					20% STATE		
	63200310	GUARDRAIL REMOVAL	FOOT	996	996		
*	63000003	STEEL PLATE BEAM GUARDRAIL, TYPE A, 9 FOOT POSTS	FOOT	600	600		
*	63100085	TRAFFIC BARRIER TERMINAL, TYPE 6	EACH	4	4		
*	63100167	TRAFFIC BARRIER TERMINAL, TYPE 1 (SPECIAL) TANGENT	EACH	4	4		
	66700305	PERMANENT SURVEY MARKERS, TYPE II	EACH	1	1		
	67000400	ENGINEER'S FIELD OFFICE, TYPE A	CAL MO	15	15		
	67100100	MOBILIZATION	L SUM	1	1		
	70100450	TRAFFIC CONTROL AND PROTECTION, STANDARD 701201	L SUM	1	1		
	70106500	TEMPORARY BRIDGE TRAFFIC SIGNALS	EACH	1	1		
	70107025	CHANGEABLE MESSAGE SIGN	CAL DA	28	28		
	70300221	TEMPORARY PAVEMENT MARKING - LINE 4" - PAINT	FOOT	2825	2825		
*	72501000	TERMINAL MARKER - DIRECT APPLIED	EACH	4	4		
*	78001110	PAINT PAVEMENT MARKING - LINE 4"	FOOT	2825	2825		
*	78100100	RAISED REFLECTIVE PAVEMENT MARKER	EACH	10	10		
*	78200005	GUARDRAIL REFLECTORS, TYPE A	EACH	7	7		
*	78200010	BARRIER WALL REFLECTORS, TYPE B	EACH	5	5		
	78300200	RAISED REFLECTIVE PAVEMENT MARKER REMOVAL	EACH	10	10		
	X4401198	HOT-MIX ASPHALT SURFACE REMOVAL, VARIABLE DEPTH	SQ YD	663	663		
	X5030250	BRIDGE DECK GROOVING (LONGITUDINAL)	SQ YD	1434	1434		
	X5040101	FULL DEPTH PRECAST BRIDGE APPROACH SLAB	SQ FT	1853	1853		

* SPECIALTY ITEM

REV - MS

MODEL: Default
FILE NAME: F:\Projects\SE IDOT\50.1478.23 PTB 203 035 WO2 US 40 Embarras River\Workfile\Sheets\0774595-SOQ.dgn

HERMANN & Associates, LLC
Civil Engineers

USER NAME = Mohammed	DESIGNED - AMH	REVISED -
	DRAWN - AMH	REVISED -
PLOT SCALE = 10.000 ' / in.	CHECKED - JAS	REVISED -
PLOT DATE = 8/8/2025	DATE - 4/25/25	REVISED -

STATE OF ILLINOIS
DEPARTMENT OF TRANSPORTATION

SUMMARY OF QUANTITIES

SCALE: N/A | SHEET 2 OF 3 SHEETS | STA. TO STA.

F.A.S. RTE.	SECTION	COUNTY	TOTAL SHEETS	SHEET NO.
1707	(FXX-B)B	CUMBERLAND	80	4

CONTRACT NO. 74595

ILLINOIS | FED. AID PROJECT

SUMMARY OF QUANTITIES

SP. ITEM	CODE NO.	PAY ITEM	UNIT	TOTAL QUANTITIES	CONSTRUCTION TYPE CODE 0010		
					80 % FEDERAL		
					20% STATE		
	X5080530	BAR TERMINATORS	EACH	480	480		
	X5230174	DRAINAGE SCUPPERS, DS-11	EACH	6	6		
	X7010216	TRAFFIC CONTROL AND PROTECTION, (SPECIAL)	L SUM	1	1		
	X7011800	TRAFFIC CONTROL AND PROTECTION, STANDARD BLR 21	L SUM	1	1		
	X7200053	REMOVE, STORE AND RE-ERECT SIGN PANEL (SPECIAL)	EACH	5	5		
	Z0004552	APPROACH SLAB REMOVAL	SQ YD	174	174		
	Z0004638	PAVEMENT BREAKING	SQ YD	706	706		
	X7200203	DETOUR SIGNING	L SUM	1	1		
	Z0029090	DIAMOND GRINDING (BRIDGE SECTION)	SQ YD	1779	1779		
	Z0049799	PROTECTING OR RESETTING SURVEY MARKERS	EACH	1	1		
Ø	Z0076600	TRAINEES	HOUR	1000	1000		
Ø	Z0076604	TRAINEES TRAINING PROGRAM GRADUATE	HOUR	1000	1000		

Ø 0042

REV - MS

MODEL: Default
FILE NAME: F:\Projects\SC EDOT\SO.1478.23 PTB 203 03\ WO2 US 40 Embarras River\Workfiles\Sheets\0774595-SOQ.dgn

HERMANN & Associates, LLC
Civil Engineers

USER NAME = Mohammed	DESIGNED - AMH	REVISED -	
	DRAWN - AMH	REVISED -	
PLOT SCALE = 10.000 ' / in.	CHECKED - JAS	REVISED -	
PLOT DATE = 8/7/2025	DATE - 4/25/25	REVISED -	

STATE OF ILLINOIS
DEPARTMENT OF TRANSPORTATION

SUMMARY OF QUANTITIES

SCALE: N/A | SHEET 3 OF 3 SHEETS | STA. TO STA.

F.A.S. RTE.	SECTION	COUNTY	TOTAL SHEETS	SHEET NO.
1707	(FXX-B)B	CUMBERLAND	80	5

CONTRACT NO. 74595

ILLINOIS | FED. AID PROJECT

** SEE PLAN SHEETS FOR GUARDRAIL TYPES & LIMITS AND SHOULDER WIDENING FOR TYPE 1 (SPECIAL) GUARDRAIL TERMINAL

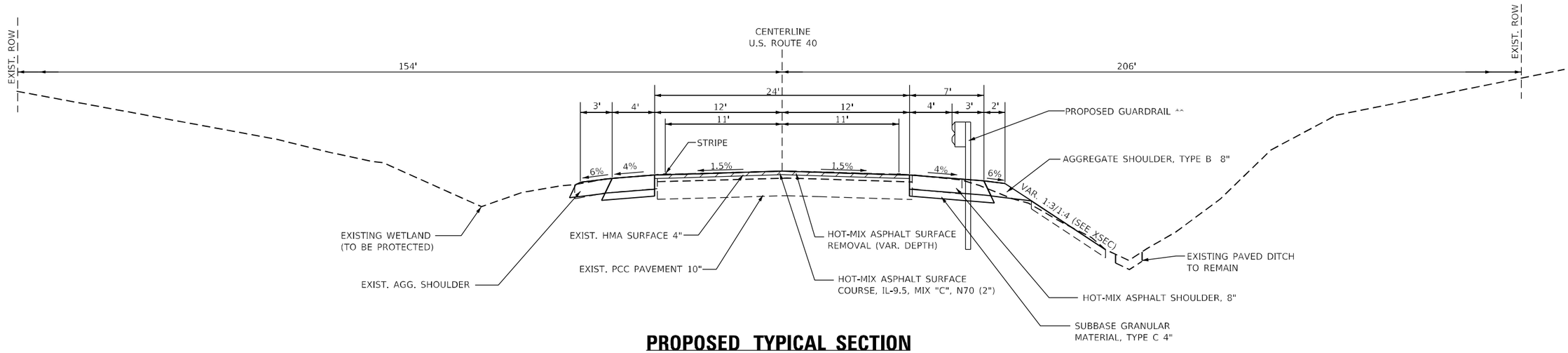

PROPOSED TYPICAL SECTION

STATION 1721+49.29 TO STATION 1723+00.00

** SEE PLAN SHEETS FOR GUARDRAIL TYPES & LIMITS AND SHOULDER WIDENING FOR TYPE 1 (SPECIAL) GUARDRAIL TERMINAL

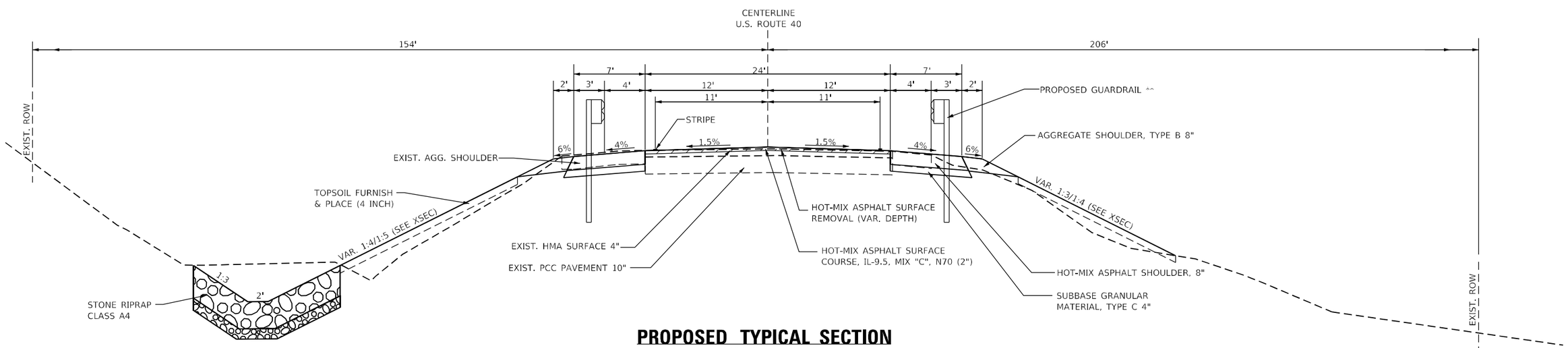

PROPOSED TYPICAL SECTION

STATION 1723+00.00 TO STATION 1723+37.50

MODEL: Default
FILE NAME: F:\Projects\50 IDOT\50.1478.23 PTB 203-039 WO2 US 40 Embarras River\WorkfileSheets\D774595-TYPICALS.dgn

HERMANN & Associates, LLC Civil Engineers	USER NAME = Mohammed	DESIGNED - AMH	REVISED -	STATE OF ILLINOIS DEPARTMENT OF TRANSPORTATION	PROPOSED TYPICAL SECTIONS	F.A.S. RTE.	SECTION	COUNTY	TOTAL SHEETS / SHEET NO.
		DRAWN - AMH	REVISED -			1707	(FXX-B)B	CUMBERLAND	80 / 6
	PLOT SCALE = 10.000 ' / in.	CHECKED - JAS	REVISED -					CONTRACT NO. 74595	
	PLOT DATE = 8/7/2025	DATE - 4/25/25	REVISED -		SCALE: N/A SHEET 1 OF 4 SHEETS STA. TO STA.		ILLINOIS	FED. AID PROJECT	

** SEE PLAN SHEETS FOR GUARDRAIL TYPES & LIMITS AND SHOULDER WIDENING FOR TYPE 1 (SPECIAL) GUARDRAIL TERMINAL

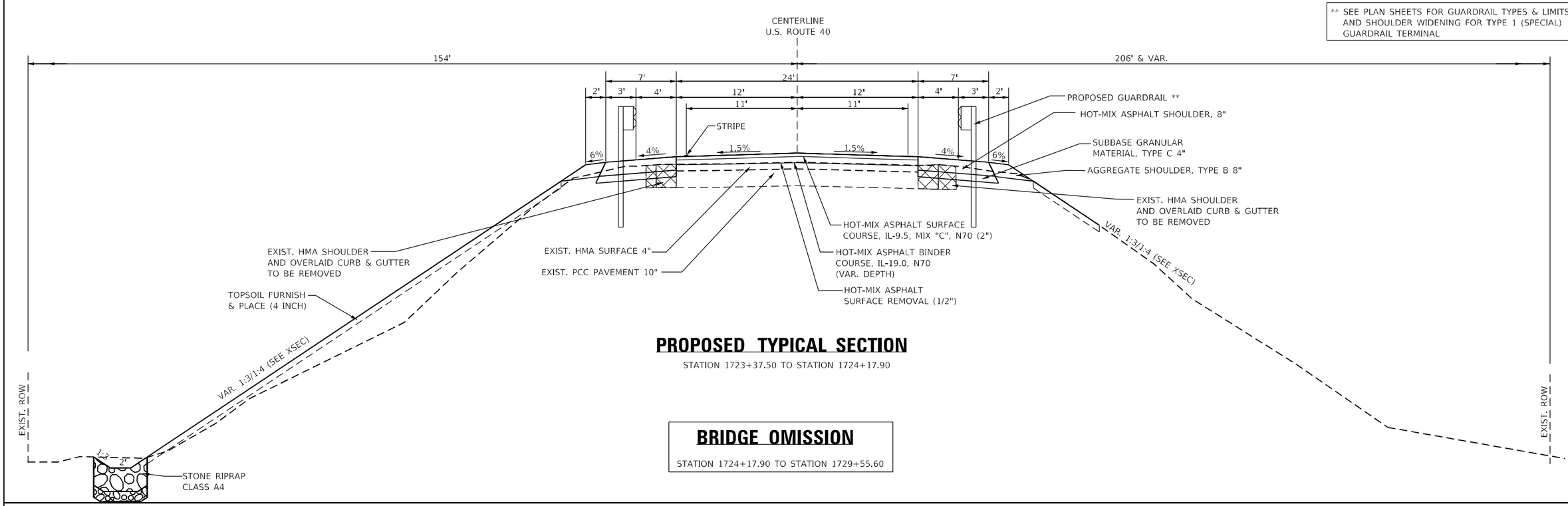

PROPOSED TYPICAL SECTION

STATION 1723+37.50 TO STATION 1724+17.90

BRIDGE OMISSION

STATION 1724+17.90 TO STATION 1729+55.60

** SEE PLAN SHEETS FOR GUARDRAIL TYPES & LIMITS AND SHOULDER WIDENING FOR TYPE 1 (SPECIAL) GUARDRAIL TERMINAL

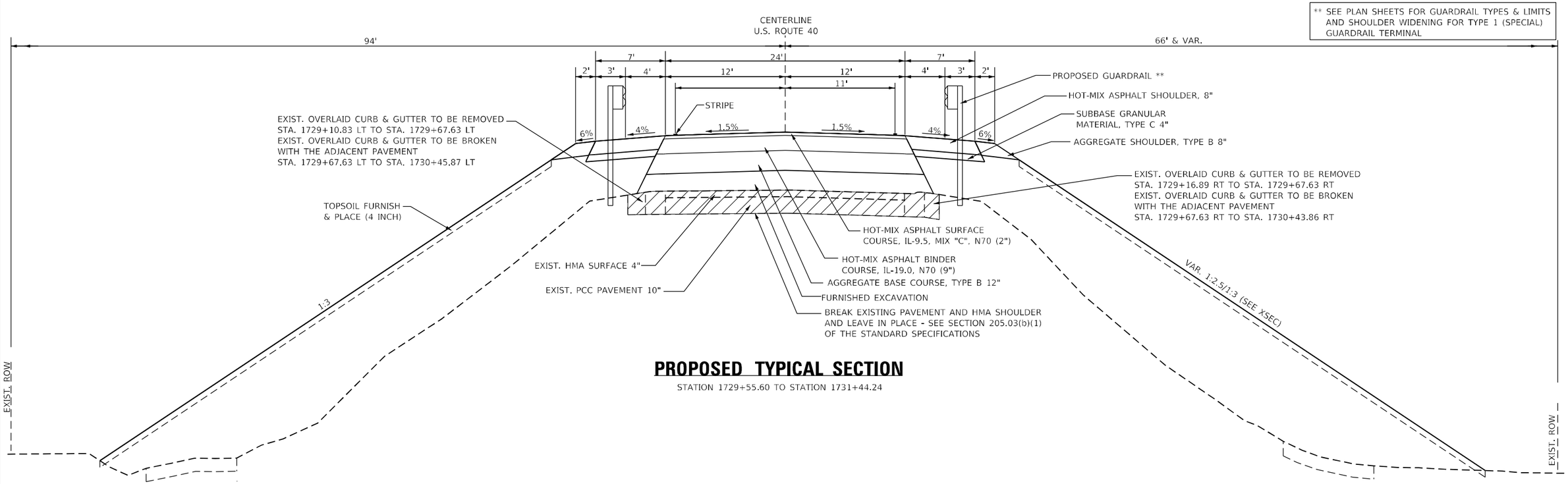

PROPOSED TYPICAL SECTION

STATION 1729+55.60 TO STATION 1731+44.24

MODEL: Default
FILE NAME: F:\Projects\50 IDOT\50.1476.23_PTB_203_039_W02_US 40 Embarras River\WorkFiles\Sheets\0274595-TYPICAL5.dgn

HERMANN & Associates, LLC Civil Engineers	USER NAME = Mohammed	DESIGNED - AMH	REVISED -	STATE OF ILLINOIS DEPARTMENT OF TRANSPORTATION	PROPOSED TYPICAL SECTIONS	F.A.S. RTE.	SECTION	COUNTY	TOTAL SHEETS / SHEET NO.
		DRAWN - AMH	REVISED -			1707	(FXX-B)B	CUMBERLAND	80 / 7
	PLOT SCALE = 10.000 ' / in.	CHECKED - JAS	REVISED -					CONTRACT NO. 74595	
	PLOT DATE = 8/7/2025	DATE - 4/25/25	REVISED -		SCALE: N/A SHEET 2 OF 4 SHEETS STA. TO STA.		ILLINOIS	FED. AID PROJECT	

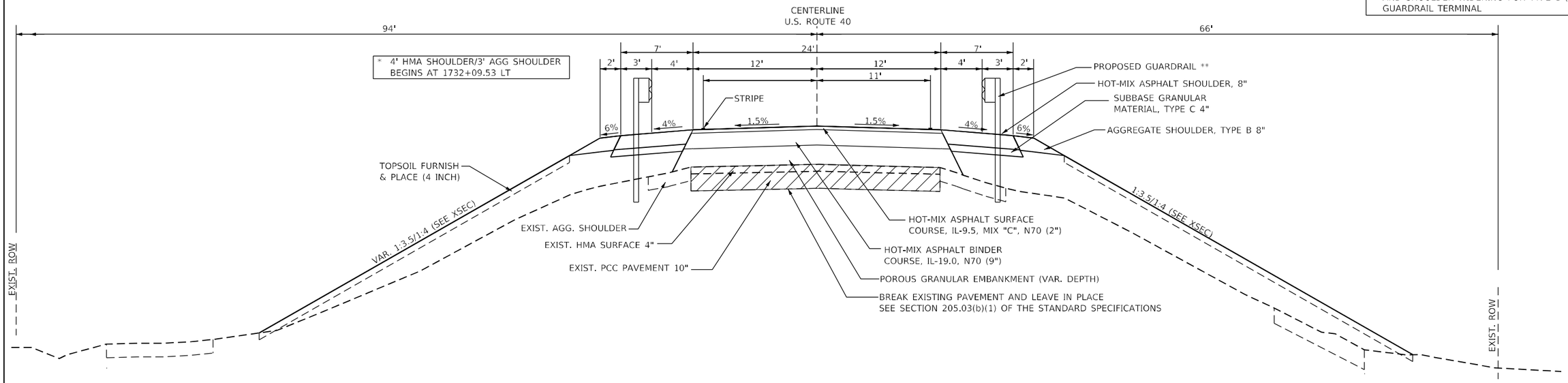

PROPOSED TYPICAL SECTION

STATION 1731+44.24 TO STATION 1732+19.73

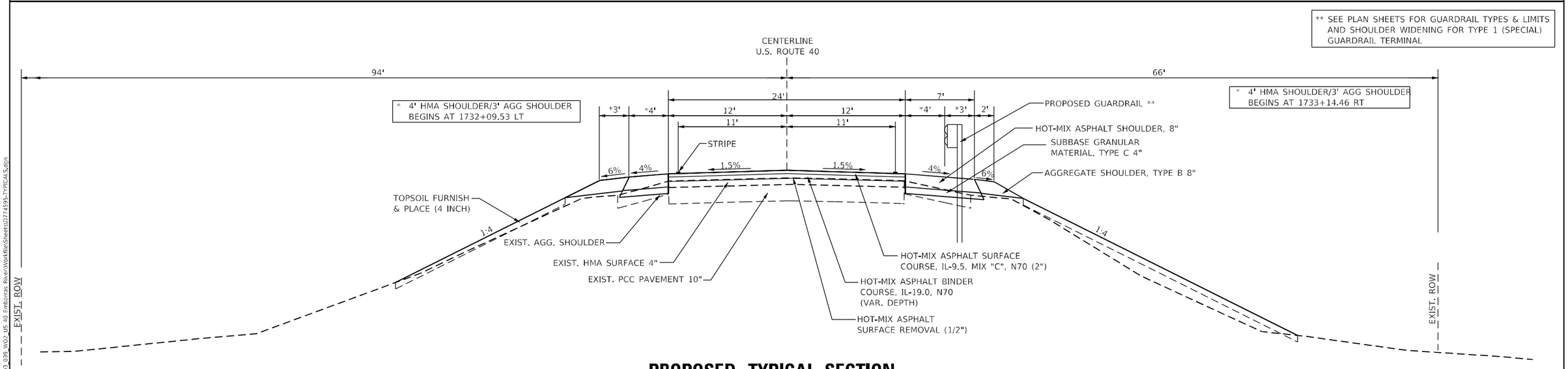

PROPOSED TYPICAL SECTION

STATION 1732+19.73 TO STATION 1733+44.78

MODEL: Default
FILE NAME: F:\Projects\50 IDOT\50.1478.23 PTB 203-039 WO2 US 40 Embarras River\WorkFiles\Sheets\D774595-TYPICALS.dgn

HERMANN & Associates, LLC Civil Engineers	USER NAME = Mohammed	DESIGNED - AMH	REVISED -	STATE OF ILLINOIS DEPARTMENT OF TRANSPORTATION	PROPOSED TYPICAL SECTIONS	F.A.S. RTE.	SECTION	COUNTY	TOTAL SHEETS / SHEET NO.
		DRAWN - AMH	REVISED -			1707	(FXX-B)B	CUMBERLAND	80 / 8
	PLOT SCALE = 10.000 ' / in.	CHECKED - JAS	REVISED -					CONTRACT NO. 74595	
	PLOT DATE = 8/7/2025	DATE - 4/25/25	REVISED -		SCALE: N/A SHEET 3 OF 4 SHEETS STA. TO STA.		ILLINOIS	FED. AID PROJECT	

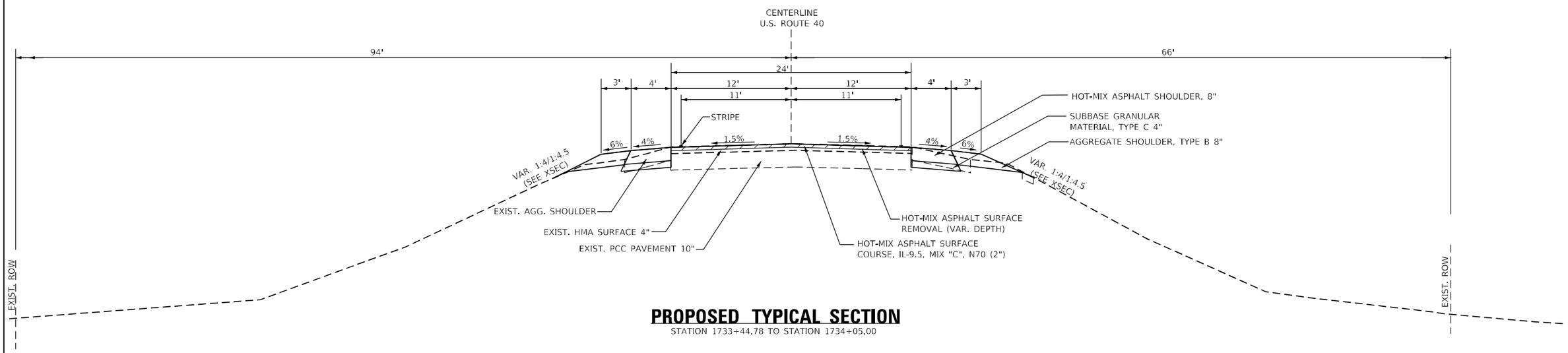

PROPOSED TYPICAL SECTION

STATION 1733+44.78 TO STATION 1734+05.00

MODEL: Default
FILE NAME: F:\Projects\50 IDOT\50.147B.23 PTB 203-039 WO2 US 40 Embarras River\WorkFiles\Sheets\0774595-TYPICALS.dgn

HERMANN & Associates, LLC Civil Engineers	USER NAME = Mohammed	DESIGNED - AMH	REVISED -	STATE OF ILLINOIS DEPARTMENT OF TRANSPORTATION	PROPOSED TYPICAL SECTIONS	F.A.S. RTE.	SECTION	COUNTY	TOTAL SHEETS / SHEET NO.
		DRAWN - AMH	REVISED -			1707	(FXX-B)B	CUMBERLAND	80 / 9
	PLOT SCALE = 10.000 ' / in.	CHECKED - JAS	REVISED -					CONTRACT NO. 74595	
	PLOT DATE = 8/7/2025	DATE - 4/25/25	REVISED -		SCALE: N/A SHEET 4 OF 4 SHEETS STA. TO STA.		ILLINOIS	FED. AID PROJECT	

SUMMARY OF EARTHWORK

LOCATION STATION TO STATION	LENGTH	20200100 EARTH EXCAVATION	FOR INFORMATION ONLY EARTH EX. ADJUSTED FOR SHRINKAGE	EMBANKMENT VOLUME	20400800 EARTHWORK BALANCE WASTE (+) OR SHORTAGE (-) FURNISHED EXCAVATION
	FEET	CU YD	CU YD	CU YD	CU YD
STA. 1721+40.00 TO STA. 1722+00.00	60.00	28.10	21.08	1.10	19.98
STA. 1722+00.00 TO STA. 1723+00.00	100.00	90.70	68.03	0.50	67.53
STA. 1723+00.00 TO STA. 1724+55.00	155.00	212.00	159.00	309.70	-150.70
STA. 1724+55.00 TO STA. 1729+20.00	465.00	BRIDGE OMISSION			
STA. 1729+20.00 TO STA. 1730+00.00	80.00	17.80	13.35	1007.20	-993.85
STA. 1730+00.00 TO STA. 1731+00.00	100.00	2.40	1.80	708.60	-706.80
STA. 1731+00.00 TO STA. 1732+00.00	100.00	3.60	2.70	386.50	-383.80
STA. 1732+00.00 TO STA. 1733+00.00	100.00	30.70	23.03	93.40	-70.38
STA. 1733+00.00 TO STA. 1734+05.00	105.00	28.60	21.45	0.10	21.35
TOTAL		413.90	310.43	2507.10	-2196.68
ROUNDED		415	310	2505	-2200

NOTE: A SHRINKAGE FACTOR OF 25% WAS USED.

TREE REMOVAL (6-15 UNITS DIAMETER)

LOCATION STATION	OFFSET	LT/RT	20100110 TREE REMOVAL (6-15 UNITS DIAMETER)
			UNIT
1729+23.00	42.5	LT	8
1729+24.20	40.9	LT	8
1729+23.50	35.9	LT	10
1729+21.00	34.2	LT	8
1728+83.00	41.6	RT	14
1729+04.00	46.5	RT	7
1729+05.00	47.2	RT	8
1729+08.06	46.0	RT	9
1729+08.00	46.7	RT	7
1729+10.30	44.2	RT	6
1729+11.00	45.5	RT	9
TOTAL			94
ROUNDED			94

TREE REMOVAL (OVER 15 UNITS DIAMETER)

LOCATION STATION	OFFSET	LT/RT	20100210 TREE REMOVAL (OVER 15 UNITS DIAMETER)
			UNIT
1724+82.50	35.3	RT	24
1728+80.10	39.2	RT	18
TOTAL			42
ROUNDED			42

AGGREGATE SCHEDULE

LOCATION STATION TO STATION	LENGTH	PAVEMENT WIDTH	PAVEMENT AREA	20700110 POROUS GRANULAR EMBANKMENT	35102400 AGGREGATE BASE COURSE, TYPE B 12"
	FEET	FEET	SQ YD	TONS	SQ YD
STA. 1729+55.60 TO STA. 1729+67.60	12.00	32	42.67		42.67
STA. 1729+67.60 TO STA. 1731+44.24	176.64	24	471.04		471.04
STA. 1731+44.24 TO STA. 1732+19.73	75.49	24	201.31	103.17	
TOTAL				103.17	513.71
ROUNDED				103	514

SEEDING SCHEDULE

LOCATION STATION TO STATION	LT/RT	SLOPE	21101615 TOPSOIL FURNISH AND PLACE, 4"	25000310 SEEDING, CLASS 4	25000400 NITROGEN FERTILIZER NUTRIENT	25000500 PHOSPHORUS FERTILIZER NUTRIENT	25000600 POTASSIUM FERTILIZER NUTRIENT	25000700 AGRICULTURAL GROUND LIMESTONE	25100645 WILDLIFE FRIENDLY EROSION CONTROL BLANKET	28000250 TEMPORARY EROSION CONTROL SEEDING
	LT/RT		SQ YD	ACRE	POUND	POUND	POUND	TON	SQ YD	POUND
STA. 1721+49.29 TO STA. 1722+00.00	RT	1:3	60	0.01	0.90	0.90	0.90	0.05	60	1
STA. 1722+00.00 TO STA. 1722+50.00	LT	1:13	78	0.02	1.80	1.80	1.80	0.10	79	2
STA. 1722+00.00 TO STA. 1722+50.00	RT	1:3.4	54	0.01	0.90	0.90	0.90	0.05	55	1
STA. 1722+50.00 TO STA. 1723+00.00	LT	1:13	41	0.01	0.90	0.90	0.90	0.05	42	1
STA. 1722+50.00 TO STA. 1723+00.00	RT	1:3.9	36	0.01	0.90	0.90	0.90	0.05	36	1
STA. 1723+00.00 TO STA. 1723+50.00	LT	1:4.5	74	0.02	1.80	1.80	1.80	0.10	74	2
STA. 1723+00.00 TO STA. 1723+50.00	RT	1:4	39	0.01	0.90	0.90	0.90	0.05	39	1
STA. 1723+50.00 TO STA. 1724+46.90	LT	1:3	663	0.14	12.60	12.60	12.60	0.70	663	14
STA. 1723+50.00 TO STA. 1724+46.90	RT	1:3	161	0.03	2.70	2.70	2.70	0.15	161	3
STA. 1726+87 - EXISTING BRIDGE PIER	CL	FLAT	36	0.01	0.90	0.90	0.90	0.05	36	1
STA. 1727+56 - EXISTING BRIDGE PIER	CL	FLAT	35	0.01	0.90	0.90	0.90	0.05	35	1
STA. 1728+44 - EXISTING BRIDGE PIER	CL	FLAT	34	0.01	0.90	0.90	0.90	0.05	34	1
STA. 1729+26.60 TO STA. 1730+00.00	LT	1:3	708	0.15	13.50	13.50	13.50	0.75	708	15
STA. 1729+26.60 TO STA. 1730+00.00	RT	1:2.5	403	0.08	7.20	7.20	7.20	0.40	403	8
STA. 1730+00.00 TO STA. 1730+50.00	LT	1:3.25	284	0.06	5.40	5.40	5.40	0.30	284	6
STA. 1730+00.00 TO STA. 1730+50.00	RT	1:2.5	200	0.04	3.60	3.60	3.60	0.20	201	4
STA. 1730+50.00 TO STA. 1731+00.00	LT	1:3.75	245	0.05	4.50	4.50	4.50	0.25	245	5
STA. 1730+50.00 TO STA. 1731+00.00	RT	1:2.75	189	0.04	3.60	3.60	3.60	0.20	189	4
STA. 1731+00.00 TO STA. 1732+00.00	LT	1:4	447	0.09	8.10	8.10	8.10	0.45	448	9
STA. 1731+00.00 TO STA. 1732+00.00	RT	1:3	326	0.07	6.30	6.30	6.30	0.35	327	7
STA. 1732+00.00 TO STA. 1732+50.00	LT	1:4	184	0.04	3.60	3.60	3.60	0.20	184	4
STA. 1732+00.00 TO STA. 1732+50.00	RT	1:3.25	148	0.03	2.70	2.70	2.70	0.15	148	3
STA. 1732+50.00 TO STA. 1733+00.00	LT	1:4	141	0.03	2.70	2.70	2.70	0.15	141	3
STA. 1732+50.00 TO STA. 1733+00.00	RT	1:3.5	151	0.03	2.70	2.70	2.70	0.15	151	3
STA. 1733+00.00 TO STA. 1734+05.00	LT	1:4	213	0.04	3.60	3.60	3.60	0.20	214	4
STA. 1733+00.00 TO STA. 1734+05.00	RT	1:4	121	0.02	1.80	1.80	1.80	0.10	121	2
TOTAL			5071	1.06	95.40	95.40	95.40	5.30	5078.00	106
ROUNDED			5071	1.00	96	96	96	5.3	5078	106

AGGREGATE SURFACE COURSE, TYPE B

LOCATION STATION TO STATION	PAVEMENT AREA (GEOPAK)	PAVEMENT DEPTH	CONVERSION RATE	40200800 AGGREGATE SURFACE COURSE, TYPE B
	SQ FT	INCH	TON/CU YD	TON
LT ENTRANCE AT STA. 1722+44.56 TO STA. 1723+02.61	1296.62	2.00	2.05	16.41
TOTAL				16.41
ROUNDED				16

BITUMINOUS SURFACE REMOVAL SCHEDULE

LOCATION STATION TO STATION	LENGTH	PAVEMENT WIDTH	PAVEMENT AREA	44000151 HOT-MIX ASPHALT SURFACE REMOVAL, 1/2"	X4401198 HOT-MIX ASPHALT SURFACE REMOVAL, VARIABLE DEPTH
	FEET	FEET	SQ YD	SQ YD	SQ YD
STA. 1721+49.27 TO STA. 1723+37.50	188.23	24	501.95		501.95
STA. 1723+37.50 TO STA. 1724+05.90	68.40	24	182.40	182.40	
STA. 1732+19.73 TO STA. 1733+44.78	125.05	24	333.47	333.47	
STA. 1733+44.78 TO STA. 1734+05.00	60.22	24	160.59		160.59
TOTAL				515.87	662.53
ROUNDED				516	663

EROSION CONTROL SCHEDULE

LOCATION STATION TO STATION	LT/RT	28000305 TEMPORARY DITCH CHECKS	28000400 PERIMETER EROSION BARRIER	28000510 INLET FILTERS	28100107 STONE RIPRAP, CLASS A4	28200200 FILTER FABRIC
	LT/RT	FOOT	FOOT	EACH	SQ YD	SQ YD
STA. 1721+49 TO STA. 1725+70	LT	48	520	1	210	304
STA. 1721+49 TO STA. 1725+70	RT	12	421			
STA. 1725+70 TO STA. 1728+70	CL		516			
STA. 1728+70 TO STA. 1734+20	LT	24	392			
STA. 1728+70 TO STA. 1734+20	RT		690			
TOTAL		84	2539	1	210	304
ROUNDED		84	2539	1	210	304

CHANNEL EXCAVATION

LOCATION	20300100 CHANNEL EXCAVATION
	CU YDS
WEST SIDE OF BRIDGE	2136.8
EAST SIDE OF BRIDGE	340
TOTAL	2476.39
ROUNDED	2476

MODEL: Default
FILE NAME: F:\Projects\50 IDOT\50.1478.23 PTB 203-039 WO2 US 40 Embarras River\WorkFiles\Sheets\D774595-SCHEDULE5.dgn

HERMANN & Associates, LLC
Civil Engineers

USER NAME = Mohammed	DESIGNED - AMH	REVISED -	
	DRAWN - AMH	REVISED -	
PLOT SCALE = 10.000 ' / in.	CHECKED - JAS	REVISED -	
PLOT DATE = 8/8/2025	DATE - 04/25/25	REVISED -	

STATE OF ILLINOIS
DEPARTMENT OF TRANSPORTATION

SCHEDULE OF QUANTITIES

SCALE: N/A | SHEET 1 OF 5 SHEETS | STA. _____ TO STA. _____

F.A.S. RTE.	SECTION	COUNTY	TOTAL SHEETS	SHEET NO.
1707	(FXX-B)B	CUMBERLAND	80	10

CONTRACT NO. 74595

ILLINOIS | FED. AID PROJECT

RESURFACING & PAVEMENT SCHEDULE

LOCATION STATION TO STATION	LENGTH	PAVEMENT WIDTH	PAVEMENT AREA	40600275 BITUMINOUS MATERIALS (PRIME COAT)	40600290 BITUMINOUS MATERIALS (TACK COAT)	40603085 HOT-MIX ASPHALT BINDER COURSE, IL-19.0, N70 (VAR DEPTH)	40603085 HOT-MIX ASPHALT BINDER COURSE, IL-19.0, N70 (9 INCH)	40604052 HOT-MIX ASPHALT SURFACE COURSE, IL-9.5, MIX "C", N70 (2 INCH)	42000070 PAVEMENT CONNECTOR (HMA) FOR BRIDGE APPROACH SLAB
	FEET	FEET	SQ YD	POUND	POUND	TON	TON	TON	SQ YD
STA. 1721+49.27 TO STA. 1723+37.50	188.23	24	501.95		225.88			56.22	
STA. 1723+37.50 TO STA. 1724+05.90	68.40	24	182.40		164.16	25.54		20.43	
STA. 1724+05.90 TO STA. 1724+17.90	12.00	32	42.67		28.80				42.67
STA. 1724+17.90 TO STA. 1729+55.6	537.70	32	1911.82	*BRIDGE OMISSION*					
STA. 1729+55.60 TO STA. 1729+67.60	12.00	32	42.67	96.00	28.80				42.67
STA. 1729+67.60 TO STA. 1732+19.73	252.13	24	672.35	1512.78	453.83		338.86	75.30	
STA. 1732+19.73 TO STA. 1733+44.78	125.05	24	333.47		375.15	116.71		37.35	
STA. 1733+44.78 TO STA. 1734+05.00	60.22	24	160.59		72.26			17.99	
SUBTOTAL						142.25	338.86		
TOTAL				1608.78	1276.62	481.11		207.28	85.33
ROUNDED				1609	1277	481		207	85

PAVEMENT REMOVAL SCHEDULE

LOCATION STATION TO STATION	LT/RT	LENGTH	WIDTH	AREA	AREA (GEOPAK)	44000100 PAVEMENT REMOVAL	44000200 DRIVEWAY PAVEMENT REMOVAL	44000500 COMBINATION CURB AND GUTTER REMOVAL	44004250 PAVED SHOULDER REMOVAL	Z0004552 APPROACH SLAB REMOVAL	Z0004638 PAVEMENT BREAKING
	LT/RT	FEET	FEET	SQ YD	SQ YD	SQ YD	SQ YD	FOOT	SQ YD	SQ YD	SQ YD
STA. 1723+18.31 TO STA. 1724+05.87	LT	87.56	VARIES	-	10.83				10.83		
STA. 1723+37.63 TO STA. 1724+05.87	RT	68.24	VARIES	-	8.84				8.84		
STA. 1722+39.29 TO STA. 1723+08.45		69.16	VARIES	-	58.94		58.94				
STA. 1723+35.93 TO STA. 1724+56.66	LT	120.73	-	-	-			120.73	-		
STA. 1723+43.55 TO STA. 1724+59.63	RT	116.08	-	-	-			116.08	-		
STA. 1724+05.90 TO STA. 1724+29.63		23.73	26.6	70.14	-	70.14			-		
STA. 1724+29.63 TO STA. 1724+59.63		30.00	26.3	87.67	-					87.67	
BRIDGE OMISSION											
STA. 1729+13.80 TO STA. 1729+43.80		30.00	26.0	86.67	-					86.67	
STA. 1729+43.80 TO STA. 1729+67.63		23.83	26.6	70.43		70.43					
STA. 1729+67.60 TO STA. 1732+19.73		252.13	VARIES		705.98						705.98
STA. 1729+10.83 TO STA. 1729+67.63	LT	56.80	VARIES					56.80			
STA. 1729+16.89 TO STA. 1729+67.63	RT	50.74	VARIES					50.74			
TOTAL						140.57	58.94	344.35	19.67	174.34	705.98
TOTAL						141	59	344	20	174	706

SHOULDER SCHEDULE

LOCATION STATION TO STATION	LT/RT	LENGTH	WIDTH[1] HMA SHOULDERS	AREA[1] HMA SHOULDERS	WIDTH[2] AGGREGATE SHOULDERS	AREA[2] AGGREGATE SHOULDERS	31102100 SUBBASE GRANULAR MATERIAL, TYPE C 4"	48203029 HOT-MIX ASPHALT SHOULDERS, 8"	48101600 AGGREGATE SHOULDERS, TYPE B 8"
	LT/RT	FEET	FEET	SQ YD	FEET	SQ YD	SQ YD	SQ YD	SQ YD
STA. 1721+49.29 TO STA. 1722+44.56	LT	95.27	4	42.34	2	21.17	42.34	42.34	37.05
STA. 1722+44.56 TO STA. 1723+00.00	LT	55.44	8	49.28	0	0.00	49.28	49.28	9.24
STA. 1723+00.00 TO STA. 1723+31.54	LT	31.54	8	28.04	2	7.01	28.04	28.04	12.27
STA. 1723+31.54 TO STA. 1723+56.54	LT	25.00	7.5	20.83	2	5.56	20.83	20.83	9.72
STA. 1723+56.54 TO STA. 1724+05.87	LT	49.33	7	38.37	2	10.96	38.37	38.37	19.18
STA. 1724+05.87 TO STA. 1724+30.94	LT	25.07	3	8.36	2	5.57	8.36	8.36	9.75
STA. 1721+49.29 TO STA. 1721+74.29	RT	25.00	6	16.67	1.5	4.17	16.67	16.67	8.33
STA. 1721+74.29 TO STA. 1722+09.29	RT	35.00	8	31.11	2	7.78	31.11	31.11	13.61
STA. 1722+09.29 TO STA. 1722+34.29	RT	25.00	7.5	20.83	2	5.56	20.83	20.83	9.72
STA. 1722+34.29 TO STA. 1724+05.87	RT	171.58	7	133.45	2	38.13	133.45	133.45	66.73
STA. 1724+05.87 TO STA. 1724+33.69	RT	27.82	3	9.27	2	6.18	9.27	9.27	10.82
	BRIDGE OMISSION								
STA. 1729+38.63 TO STA. 1729+67.63	LT	29.00	3	9.67	2	6.44	9.67	9.67	11.28
STA. 1729+67.63 TO STA. 1731+25.53	LT	157.90	7	122.81	2	35.09	122.81	122.81	61.41
STA. 1731+25.53 TO STA. 1731+50.53	LT	25.00	7.5	20.83	2	5.56	20.83	20.83	9.72
STA. 1731+50.53 TO STA. 1731+85.53	LT	35.00	8	31.11	2	7.78	31.11	31.11	13.61
STA. 1731+85.53 TO STA. 1732+09.53	LT	24.00	6	16.00	2.5	6.67	16.00	16.00	10.67
STA. 1732+09.53 TO STA. 1734+05.00	LT	195.47	4	86.88	3	85.16	86.88	86.88	97.74
STA. 1729+42.56 TO STA. 1729+67.63	RT	25.07	3	8.36	2	5.57	8.36	8.36	9.75
STA. 1729+67.63 TO STA. 1732+29.46	RT	261.83	7	203.65	2	58.18	203.65	203.65	101.82
STA. 1732+29.46 TO STA. 1732+54.46	RT	25.00	7.5	20.83	2	5.56	20.83	20.83	9.72
STA. 1732+54.46 TO STA. 1732+89.46	RT	35.00	8	31.11	2	7.78	31.11	31.11	13.61
STA. 1732+89.46 TO STA. 1733+14.46	RT	25.00	6	16.67	2.5	6.94	16.67	16.67	11.11
STA. 1733+14.46 TO STA. 1734+05.00	RT	90.54	4	40.24	3	30.18	40.24	40.24	45.27
TOTAL							1006.70	1006.70	602.13
ROUNDED							1007	1007	602

[1] WIDTH AND ASSOCIATED AREA OF: SUBBASE GRANULAR MATERIAL, TYPE C 4"
BITUMINOUS MATERIALS (PRIME COAT)
HOT-MIX ASPHALT SHOULDERS, 8"

[2] WIDTH AND ASSOCIATED AREA OF: AGGREGATE SHOULDERS, TYPE B 8", NO WEDGE

ENGINEER'S FIELD OFFICE SCHEDULE

DESCRIPTION	67000400 ENGINEER'S FIELD OFFICE, TYPE A
	CAL MO
PRELIMINARY CONSTRUCTION	1
BRIDGE AND ROADWAY CONSTRUCTION	12
FINAL CONSTRUCTION	1
MISCELLANEOUS CLEANUP, ETC.	1
TOTAL	15
ROUNDED	15

PERMANENT SURVEY MARKERS SCHEDULE

LOCATION STATION TO STATION	66700305 PERMANENT SURVEY MARKERS, TYPE II
	EACH
STA. 1724+47.90 TO STA. 1729+25.60	1
TOTAL	1
ROUNDED	1

STORM SEWER REMOVAL SUMMARY

LOCATION STATION TO STATION	LT/RT	LENGTH	55100500 STORM SEWER REMOVAL 12"	60500060 REMOVING INLETS
	LT/RT	FOOT	FOOT	EACH
STA. 1730+44.28, 15.07' LT TO STA. 1730+44.80, 57.47' LT	LT	42.40	42.40	
STA. 1730+43.86, 15.53' RT TO STA. 1730+43.74, 50.23' RT	RT	34.70	34.70	
STA. 1730+43.75, 14.78' LT	LT	-		1.0
STA. 1730+43.47, 15.10' RT	RT	-		1.0
TOTAL			77.10	2.00
ROUNDED			77	2

GUARDRAIL REMOVAL SCHEDULE

LOCATION STATION TO STATION	LT/RT	LENGTH	63200310 GUARDRAIL REMOVAL
	LT/RT	FEET	FOOT
STA. 1721+49.29 TO STA. 1724+59.63	RT	310.57	310.57
STA. 1723+05.09 TO STA. 1724+59.63	LT	154.54	154.54
STA. 1724+59.63 TO STA. 1729+13.80	*BRIDGE OMISSION*		
STA. 1729+13.80 TO STA. 1731+31.80	RT	218.00	218.00
STA. 1729+13.80 TO STA. 1732+26.61	LT	312.81	312.81
TOTAL			995.92
ROUNDED			996

MODEL: Default
FILE NAME: F:\Projects\50 IDOT\50.1478.23_PTB 203_039_WO2_US 40 Embarras River\Workfile\Sheets\0774595-SCHEDULES.dgn

HERMANN & Associates, LLC
Civil Engineers

USER NAME = Mohammed	DESIGNED - AMH	REVISED -	
	DRAWN - AMH	REVISED -	
PLOT SCALE = 10.000 ' / in.	CHECKED - JAS	REVISED -	
PLOT DATE = 8/7/2025	DATE - 04/25/25	REVISED -	

STATE OF ILLINOIS
DEPARTMENT OF TRANSPORTATION

SCHEDULE OF QUANTITIES

SCALE: N/A | SHEET 2 OF 5 SHEETS | STA. TO STA.

F.A.S. RTE.	SECTION	COUNTY	TOTAL SHEETS	SHEET NO.
1707	(FXX-B)B	CUMBERLAND	80	11

CONTRACT NO. 74595

ILLINOIS | FED. AID PROJECT

GUARDRAIL SCHEDULE

LOCATION STATION TO STATION	LT/RT	LENGTH	63100085 TRAFFIC BARRIER TERMINAL, TYPE 6	63000003 STEEL PLATE BEAM GUARDRAIL, TYPE A, 9 FOOT POSTS	63100167 TRAFFIC BARRIER TERMINAL, TYPE 1 (SPECIAL) TANGENT	78200005 GUARDRAIL REFLECTORS, TYPE A	78200010 BARRIER WALL REFLECTORS, TYPE B	72501000 TERMINAL MARKER - DIRECT APPLIED
	LT/RT	FEET	EACH	FOOT	EACH	EACH	EACH	EACH
STA. 1721+84.29 TO STA. 1722+34.29	RT	50.00			1.0			1.0
STA. 1722+34.29 TO STA. 1723+96.79	RT	162.50		162.50		3.0		
STA. 1723+96.79 TO STA. 1724+36.19	RT	39.40	1.0					
STA. 1724+36.19 TO STA. 1729+40.06	RT	503.87					2.0	
STA. 1729+40.06 TO STA. 1729+79.46	RT	39.40	1.0			1.0		
STA. 1729+79.46 TO STA. 1732+29.46	RT	250.00		250.00				
STA. 1732+29.46 TO STA. 1732+79.46	RT	50.00			1.0			1.0
STA. 1723+06.54 TO STA. 1723+56.54	LT	50.00			1.0			1.0
STA. 1723+56.54 TO STA. 1723+94.04	LT	37.50		37.50		1.0		
STA. 1723+94.04 TO STA. 1724+33.44	LT	39.40	1.0					
STA. 1724+33.44 TO STA. 1729+36.13	LT	502.69					3.0	
STA. 1729+36.13 TO STA. 1729+75.53	LT	39.40	1.0			2.0		
STA. 1729+75.53 TO STA. 1731+25.53	LT	150.00		150.00				
STA. 1731+25.53 TO STA. 1731+75.53	LT	50.00			1.0			1.0
		TOTAL	4.0	600.0	4.0	7.0	5.0	4.0
		ROUNDED	4	600	4	7	5	4

REMOVE, STORE AND RE-ERECT SIGN PANEL (SPECIAL)

LOCATION			X7200053
STATION	OFFSET	RT/LT	EACH
1721+59.54 (APPROX.)	23.34 (APPROX.)	RT	1.0
1723+05.56 (APPROX.)	28.42 (APPROX.)	LT	1.0
1724+53.66 (APPROX.)	18.15 (APPROX.)	RT	1.0
1729+13.80	18.34	LT	1.0
1731+68.48	22.98	LT	1.0
		TOTAL	5.0
		ROUNDED	5

SUMMARY OF SCHEDULES

DESCRIPTION	28200200 FILTER FABRIC
	SQ YD
EROSION CONTROL SCHEDULE (UNDER RR4)	304.0
BRIDGE SCHEDULE (UNDER RR5)	1845.0
TOTAL	2149.0
ROUNDED	2149

PAVEMENT MARKING SCHEDULE

LOCATION STATION TO STATION	LENGTH	TEMPORARY PAVEMENT MARKING - LINE 4" 70300220 EASTBOUND EDGELINE (WHITE)	WESTBOUND EDGELINE (WHITE)	CENTERLINE (SKIP DASH)	PAINT PAVEMENT MARKING - LINE 4" 78001110 EASTBOUND EDGELINE (WHITE)	WESTBOUND EDGELINE (WHITE)	CENTERLINE (SKIP DASH)
	FEET	FOOT	FOOT	EACH	FOOT	FOOT	EACH
STA. 1721+49.29 TO STA. 1724+47.90	298.61	298.61	298.61	74.65	298.61	298.61	74.65
STA. 1724+47.90 TO STA. 1729+25.60	477.70	477.70	477.70	119.43	477.70	477.70	119.43
STA. 1729+25.60 TO STA. 1734+05.00	479.40	479.40	479.40	119.85	479.40	479.40	119.85
SUBTOTAL	1255.71	1255.71	1255.71	313.93	1255.71	1255.71	313.93
TOTAL		2825.35			2825.35		
ROUNDED		2825			2825		

TRAFFIC CONTROL & DETOUR SIGNING SCHEDULE

DESCRIPTION	70100450 TRAFFIC CONTROL AND PROTECTION, STANDARD 701201	70106500 TEMPORARY BRIDGE TRAFFIC SIGNALS	70107025 CHANGEABLE MESSAGE SIGN	X7010216 TRAFFIC CONTROL AND PROTECTION, (SPECIAL)	X7011800 TRAFFIC CONTROL AND PROTECTION. STANDARD BLR 21	Z0016702 DETOUR SIGNING
	L SUM	EACH	CAL DAY	L SUM	L SUM	L SUM
PROJECT SITE (US 40)	1.0		28.0		1.0	1.0
OLD CUMBERLAND ROAD		1.0		1.0		
TOTAL	1.0	1.0	28.0	1.0	1.0	1.0
ROUNDED	1	1	28	1	1	1

RAISED REFLECTIVE PAVEMENT MARKER SCHEDULE

LOCATION STATION TO STATION	LENGTH	78100100 RAISED REFLECTIVE PAVEMENT MARKER (TWO-WAY AMBER)	78300200 RAISED REFLECTIVE PAVEMENT MARKER REMOVAL
	FEET	EACH	EACH
STA. 1721+49.29 TO STA. 1724+47.90	298.61	4	4
STA. 1724+47.00 TO STA. 1720+25.60	BRIDGE OMISSION		
STA. 1729+25.60 TO STA. 1734+05.00	479.40	6	6
TOTAL		10	10
ROUNDED		10	10

PROTECTING OR RESETTING SURVEY MARKERS

DESCRIPTION	Z0049799
	EACH
PROJECT SITE	1.0
TOTAL	1.0
ROUNDED	1

MODEL: Default
FILE NAME: F:\Projects\50 IDOT\50.1478.23 PTB 203-039 WO2 US 40 Embarras River\Workfile\Sheets\074595-SCHEDULES.dgn

HERMANN & Associates, LLC
Civil Engineers

USER NAME = Mohammed	DESIGNED - AMH	REVISED -	
	DRAWN - AMH	REVISED -	
PLOT SCALE = 10.000 ' / in.	CHECKED - JAS	REVISED -	
PLOT DATE = 8/7/2025	DATE - 04/25/25	REVISED -	

STATE OF ILLINOIS
DEPARTMENT OF TRANSPORTATION

SCHEDULE OF QUANTITIES

SCALE: N/A | SHEET 3 OF 5 SHEETS | STA. TO STA.

F.A.S. RTE.	SECTION	COUNTY	TOTAL SHEETS	SHEET NO.
1707	(FXX-B)B	CUMBERLAND	80	12
		CONTRACT NO. 74595		
	ILLINOIS	FED. AID PROJECT		

US ROUTE 40 - ALIGNMENT COORDINATES

POINT	NORTHING	EASTING
POT Sta 1718+26.67	935990.277	1024962.341
POT Sta 1745+00.00	936453.474	1027595.237
POT Sta 1755+79.90	936640.583	1028658.804

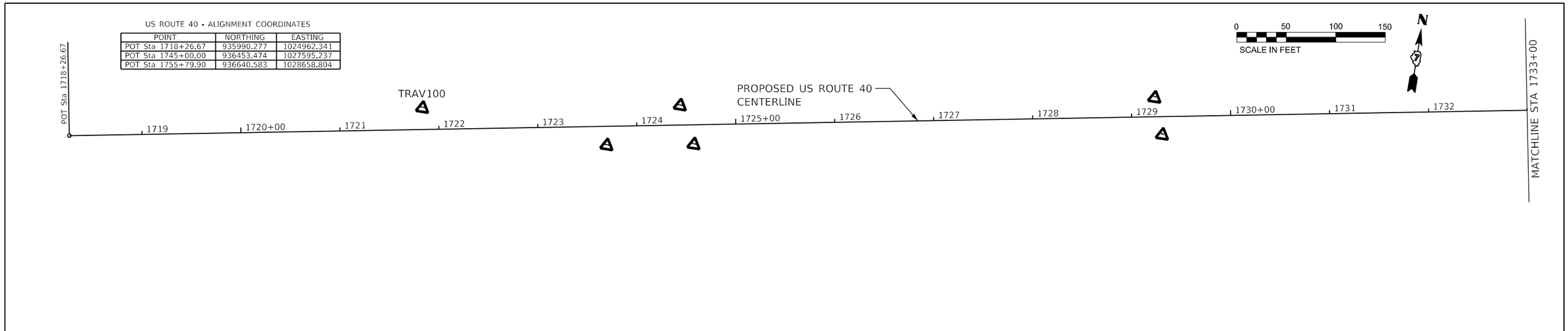

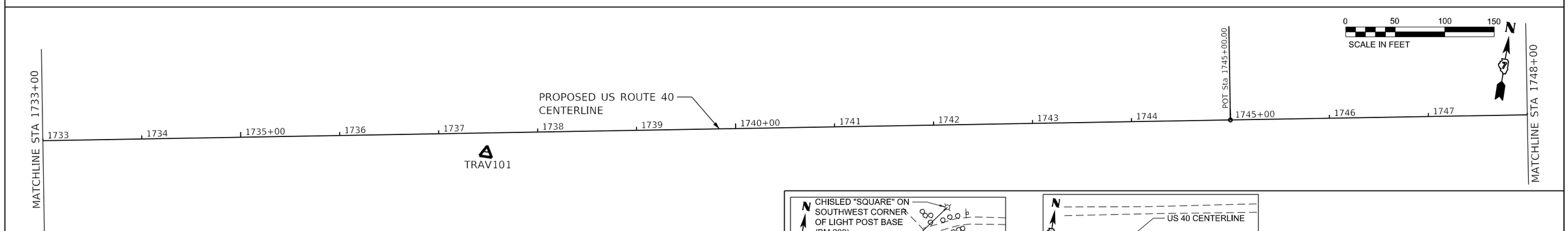

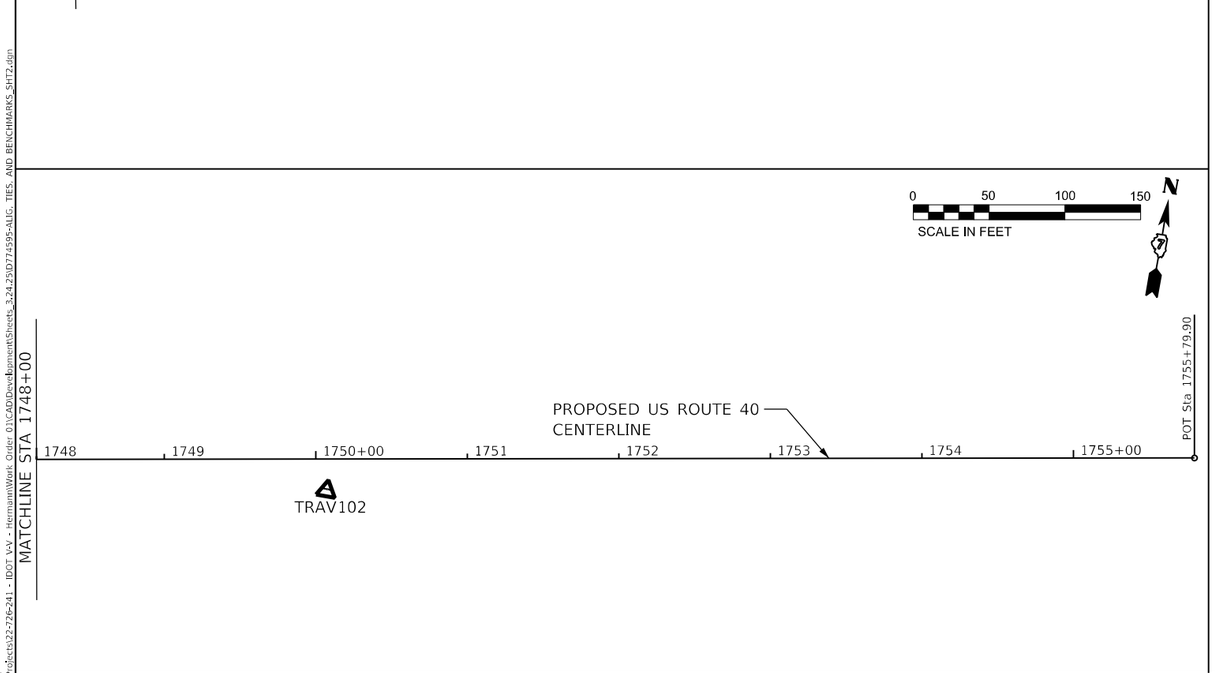

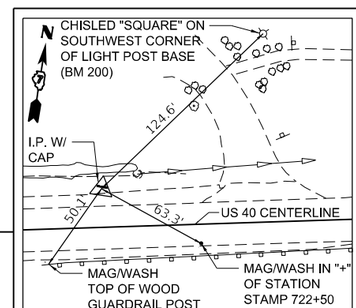

TRAV 100

STA 1721+83.73, 21.50' LT, US 40
N: 936073.321 E: 1025310.279

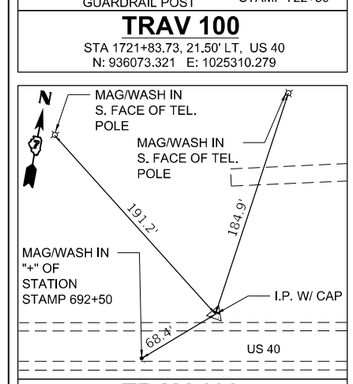

TRAV 103

N: 935318.553 E: 1022537.567

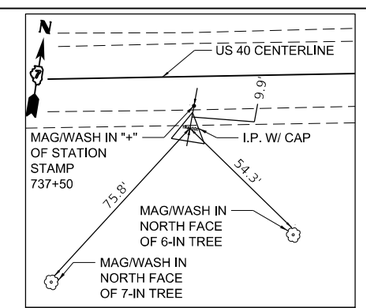

TRAV 101

STA 1737+47.51, 20.41' RT, US 40
N: 936302.988 E: 1026857.667

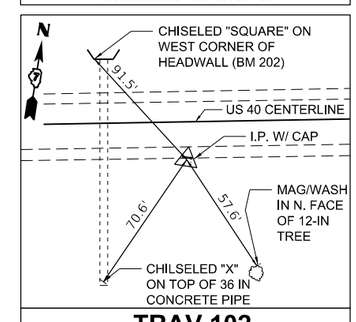

TRAV 102

STA 1750+06.94, 21.00' RT, US 40
N: 936520.6290 E: 1028098.148

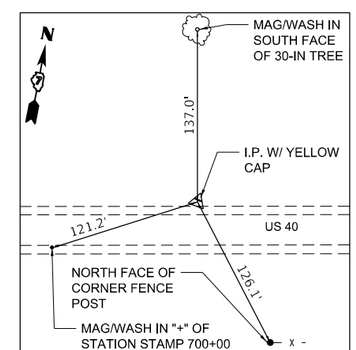

TRAV 104

N: 935596.365 E: 1023308.902

MODEL: Default
FILE NAME: F:\Projects\22-726-241 - IDOT V-V - Hermann\Work Order 01\CAD\Development\Sheets_3.24.25\0774595-ALIG. TIES. AND BENCHMARKS_SHT2.dgn

M SQUARED ENGINEERING, LLC
500 PARK BLVD, SUITE 775
ITASCA, IL
312-423-1976

USER NAME = KGabbert	DESIGNED - TM	REVISED -	
	DRAWN - TM	REVISED -	
PLOT SCALE = 100.0000 ' / in.	CHECKED - DB	REVISED -	
PLOT DATE = 8/8/2025	DATE - 8/8/2025	REVISED -	

STATE OF ILLINOIS
DEPARTMENT OF TRANSPORTATION

ALIGNMENT, TIES, AND BENCHMARKS

SCALE: 1'=100' | SHEET 1 OF 1 SHEETS | STA. 1718+26.67 TO STA. 1755+79.90

F.A.S RTE.	SECTION	COUNTY	TOTAL SHEETS	SHEET NO.
1707	(FXX-B)B	CUMBERLAND	80	13

CONTRACT NO. 74595

ILLINOIS | FED. AID PROJECT

LEGEND

- SEEDING, CLASS 4 TOPSOIL, FURNISH AND PLACE, 4" W/ WILDLIFE FRIENDLY EROSION CONTROL BLANKET
- TEMPORARY DITCH CHECK
- PERIMETER EROSION BARRIER
- INLET FILTER
- WETLAND
- RIPRAP

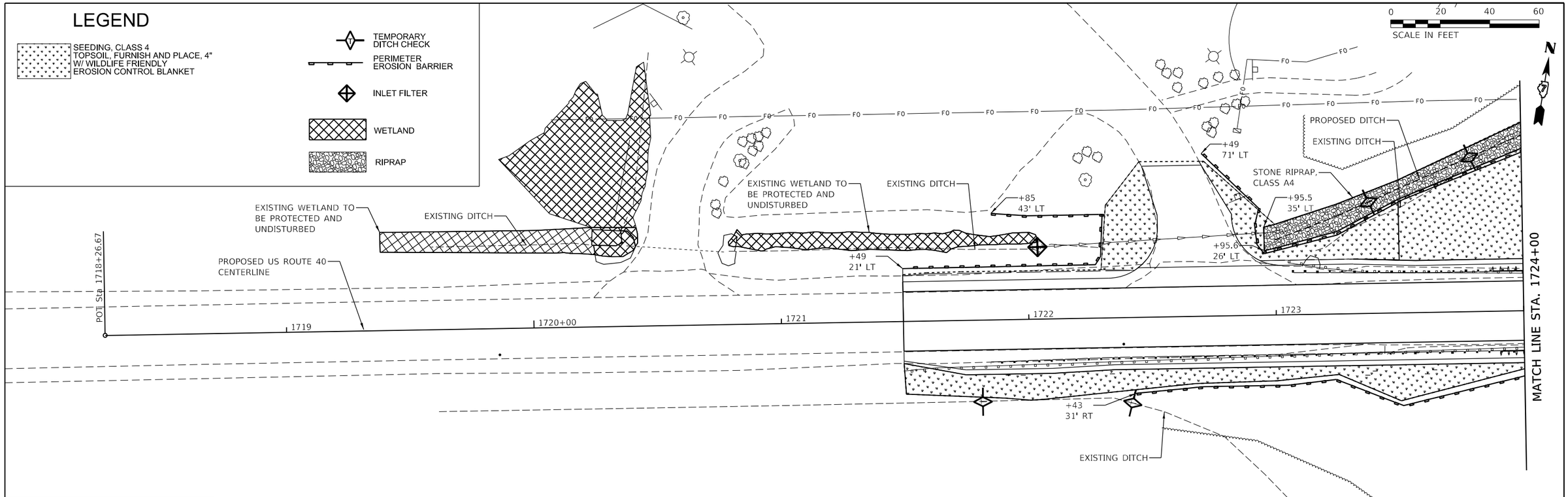

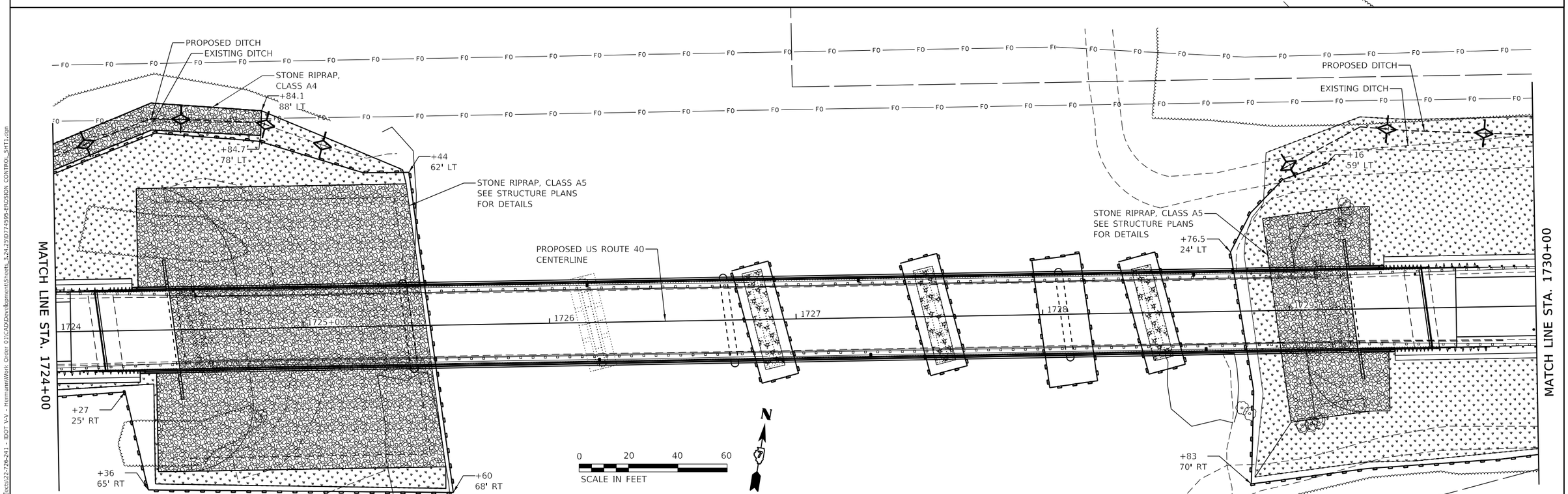

MODEL: Default
FILE NAME: F:\Projects\22-726-241 - IDOT VLV - Hermann\Work Order 01\CAD\Dave\Epsmont\Sheets_3.24.25\0774595-EROSION_CONTROL_SHT1.dgn

M SQUARED ENGINEERING, LLC
500 PARK BLVD, SUITE 775
ITASCA, IL
312-429-4976

USER NAME = KGabbert	DESIGNED - TM	REVISED -
	DRAWN - TM	REVISED -
PLOT SCALE = 40.0000 ' / in.	CHECKED - DB	REVISED -
PLOT DATE = 8/8/2025	DATE - 8/8/2025	REVISED -

STATE OF ILLINOIS
DEPARTMENT OF TRANSPORTATION

EROSION CONTROL PLAN

SCALE: 1'=40" | SHEET 1 OF 2 SHEETS | STA. 1718+26.67 TO STA. 1730+00

F.A.S RTE.	SECTION	COUNTY	TOTAL SHEETS	SHEET NO.
1707	(FXX-B)B	CUMBERLAND	80	14

CONTRACT NO. 74595

ILLINOIS | FED. AID PROJECT

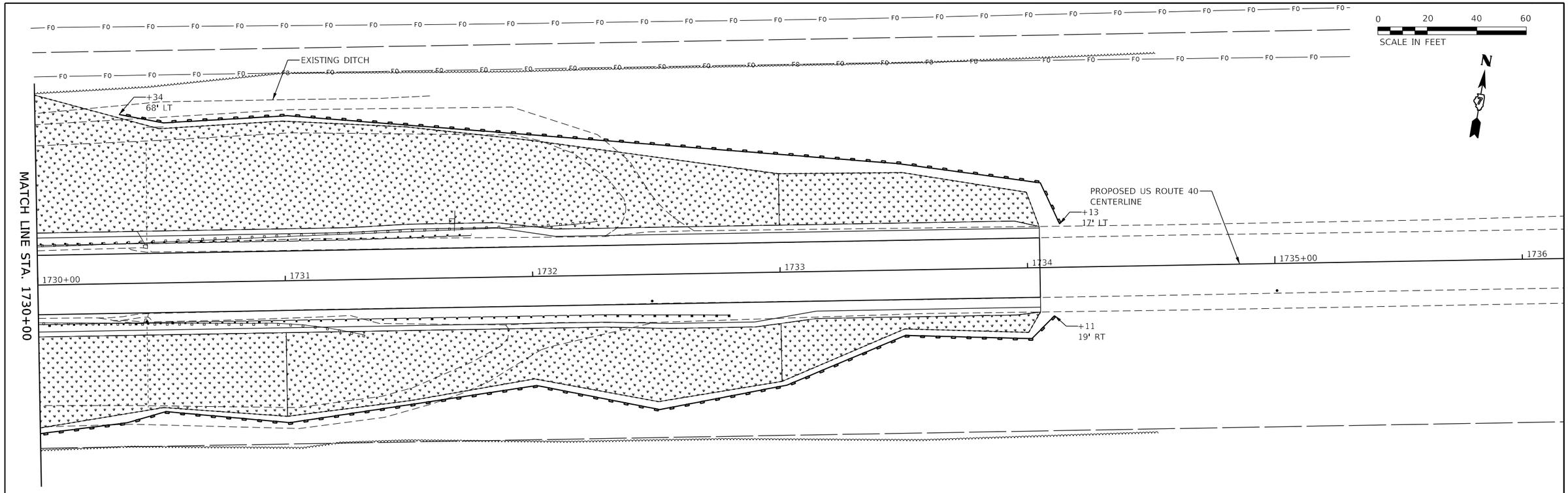

LEGEND

- SEEDING, CLASS 4 TOPSOIL, FURNISH AND PLACE, 4" W/ WILDLIFE FRIENDLY EROSION CONTROL BLANKET
- TEMPORARY DITCH CHECK
- PERIMETER EROSION BARRIER
- INLET FILTER
- WETLAND
- RIPRAP

MODEL: Default
FILE NAME: F:\Projects\22-276-241 - IDOT V-V - Hermann\Work Order 01\CADD\Construction\Sheets_3_24_25\D774595-EROSION CONTROL_SHT2.dgn

M SQUARED ENGINEERING, LLC
500 PARK BLVD, SUITE 775
ITASCA, IL
312-429-4976

USER NAME = KGabbert	DESIGNED - TM	REVISED -	
	DRAWN - TM	REVISED -	
PLOT SCALE = 40.0000 ' / in.	CHECKED - DB	REVISED -	
PLOT DATE = 8/8/2025	DATE - 8/8/2025	REVISED -	

STATE OF ILLINOIS
DEPARTMENT OF TRANSPORTATION

EROSION CONTROL PLAN

SCALE: 1'=40" | SHEET 2 OF 2 SHEETS | STA. 1730+00 TO STA. 1736+00

F.A.S RTE.	SECTION	COUNTY	TOTAL SHEETS	SHEET NO.
1707	(FXX-B)B	CUMBERLAND	80	15

CONTRACT NO. 74595

ILLINOIS | FED. AID PROJECT

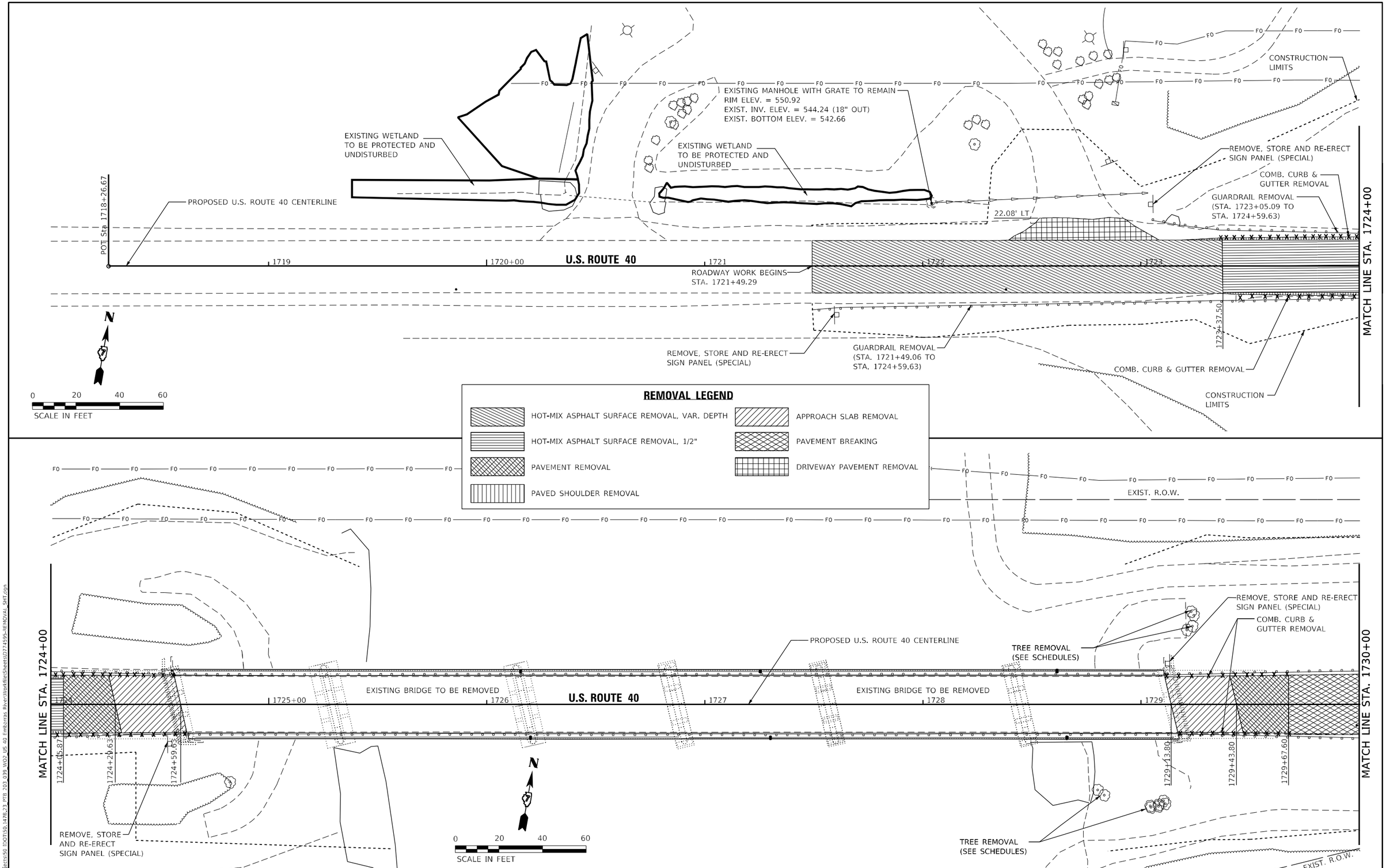

MODEL: Default
FILE NAME: F:\Projects\50 IDOT\50_1478_23_PTB_203_039_W02_US_40_Embcross_RiverWorkFileSheets\0274595-REMOVAL_SHT.dgn

HERMANN & Associates, LLC Civil Engineers	USER NAME = Mohammed	DESIGNED - AMH	REVISED -
		DRAWN - AMH	REVISED -
	PLOT SCALE = 40.0000 ' / in.	CHECKED - JAS	REVISED -
	PLOT DATE = 8/7/2025	DATE - 04/25/25	REVISED -

STATE OF ILLINOIS
DEPARTMENT OF TRANSPORTATION

REMOVAL PLAN SHEET

SCALE 1"=20' | SHEET 1 OF 2 SHEETS | STA. 1718+00 TO STA. 1730+00

F.A.S. RTE.	SECTION	COUNTY	TOTAL SHEETS	SHEET NO.
1707	(FXX-B)B	CUMBERLAND	80	16
		CONTRACT NO. 74595		
		ILLINOIS	FED. AID PROJECT	

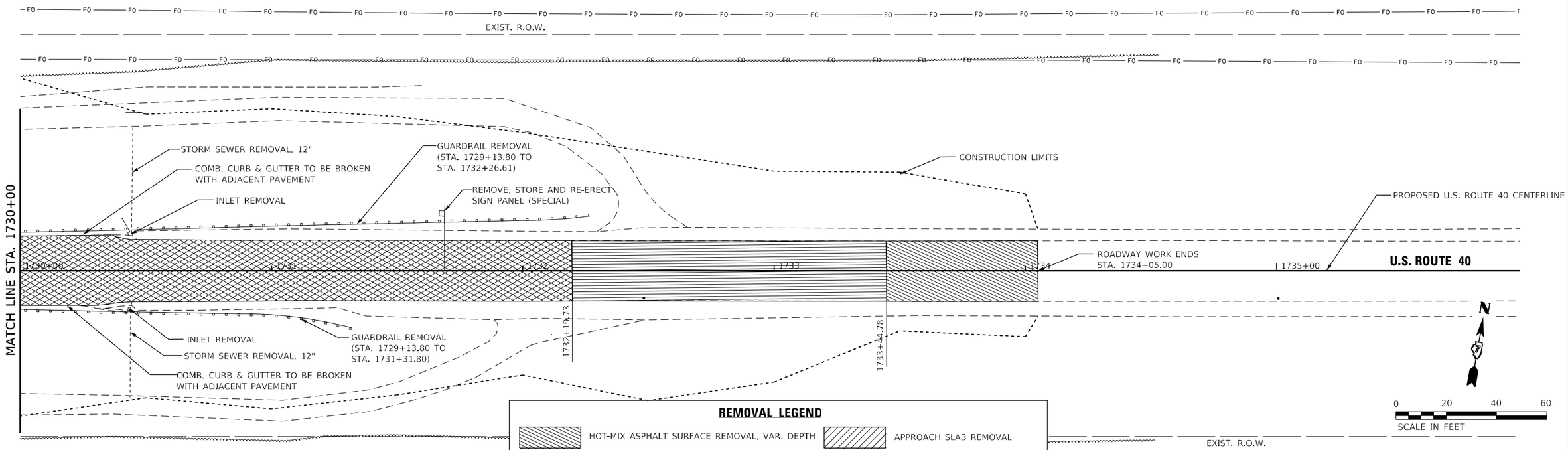

REMOVAL LEGEND

- HOT-MIX ASPHALT SURFACE REMOVAL, VAR. DEPTH
- HOT-MIX ASPHALT SURFACE REMOVAL, 1/2"
- PAVEMENT REMOVAL
- PAVED SHOULDER REMOVAL
- APPROACH SLAB REMOVAL
- PAVEMENT BREAKING
- DRIVEWAY PAVEMENT REMOVAL

MODEL: Default
FILE NAME: F:\Projects\50 IDOT\50.1478.2.3 PTB 203 039 WO2 US 40 Embarras River\Work\RlsSheets\0774595-REMOVAL_SHT.dgn

HERMANN & Associates, LLC
Civil Engineers

USER NAME = Mohammed	DESIGNED - AMH	REVISED -	
	DRAWN - AMH	REVISED -	
PLOT SCALE = 40.0000 ' / in.	CHECKED - JAS	REVISED -	
PLOT DATE = 8/7/2025	DATE - 04/25/25	REVISED -	

STATE OF ILLINOIS
DEPARTMENT OF TRANSPORTATION

REMOVAL PLAN SHEET

SCALE 1"=20' | SHEET 2 OF 2 SHEETS | STA. 1730+00 TO STA. 1736+00

F.A.S. RTE.	SECTION	COUNTY	TOTAL SHEETS	SHEET NO.
1707	(FXX-B)B	CUMBERLAND	80	17
		CONTRACT NO. 74595		
	ILLINOIS	FED. AID PROJECT		

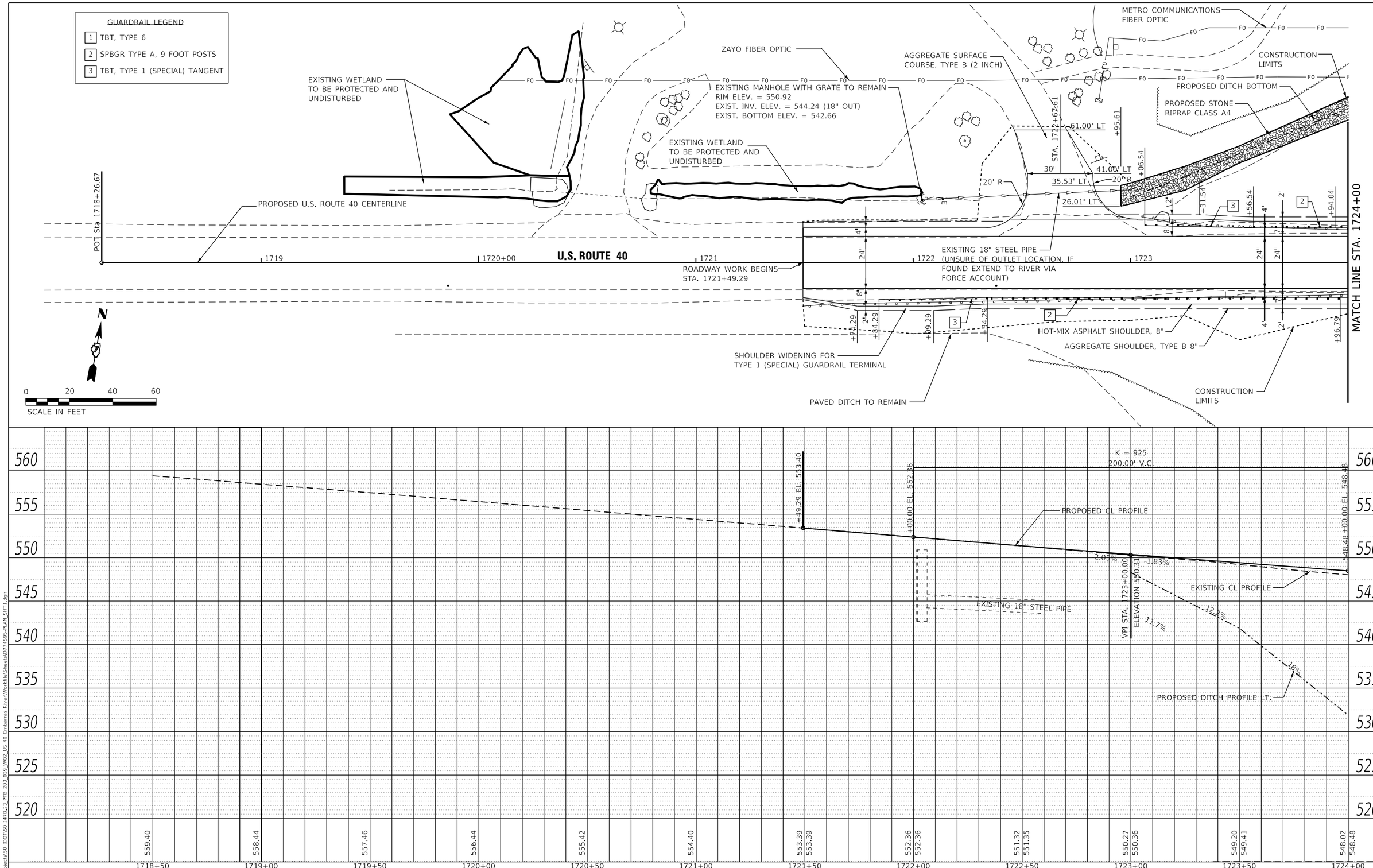

PLAN	BY	DATE
SURVEYED		
PLOTTED		
ALIGNMENT CHECKED		
R/W CHECKED		
CADD FILE NAME		
NOTE BOOK NO.		

PROFILE	BY	DATE
SURVEYED		
PLOTTED		
GRADES CHECKED		
BDR. NOTED		
STRUCTURE NOTATIONS CHKD		
NOTE BOOK NO.		

MODEL: Default
FILE NAME: F:\Projects\50 IDOT\50.1478.23_PTB 203_039_W02_US 40 Embarras River\Workfile(Sheets)\0774595-PLAN_SHT1.dgn

HERMANN & Associates, LLC
Civil Engineers

USER NAME = Mohammed	DESIGNED - AMH	REVISED -	
	DRAWN - AMH	REVISED -	
PLOT SCALE = 40.0000 ' / in.	CHECKED - JAS	REVISED -	
PLOT DATE = 8/7/2025	DATE - 04/25/25	REVISED -	

STATE OF ILLINOIS
DEPARTMENT OF TRANSPORTATION

PROPOSED PLAN & PROFILE SHEET

SCALE 1"=20' | SHEET 1 OF 3 SHEETS | STA. 1718+00 TO STA. 1724+00

F.A.S. RTE.	SECTION	COUNTY	TOTAL SHEETS	SHEET NO.
1707	(FXX-B)B	CUMBERLAND	80	18
		CONTRACT NO. 74595		
		ILLINOIS	FED. AID PROJECT	

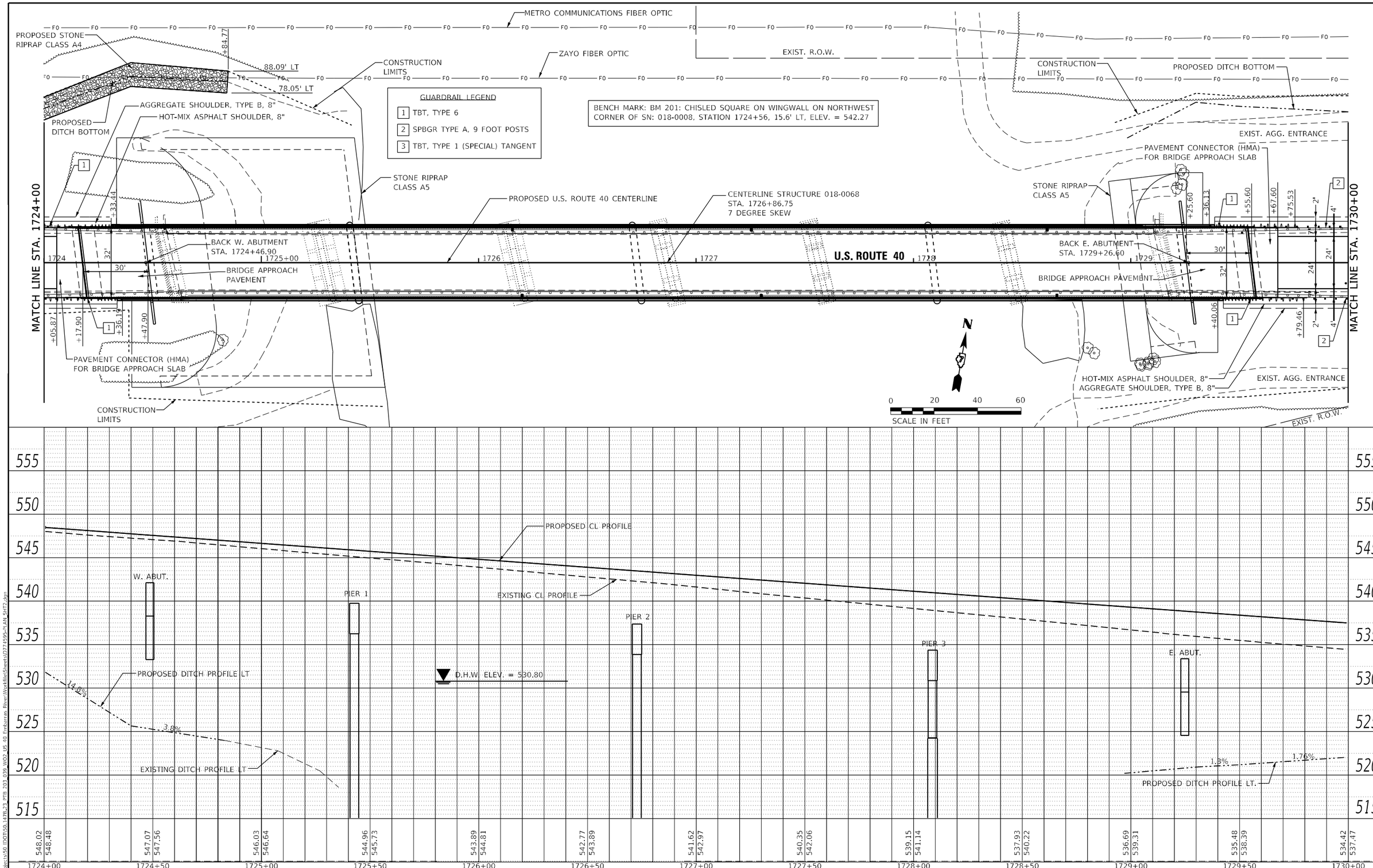

PLAN — SURVEYED / PLOTTED / ALIGNMENT CHECKED / R.O.W. CHECKED / CADD FILE NAME / NOTE BOOK NO. / BY / DATE

PROFILE — SURVEYED / PLOTTED / GRADES CHECKED / B.M. NOTED / STRUCTURE NOTATIONS CHKD / NOTE BOOK NO. / BY / DATE

MODEL: Default
FILE NAME: F:\Projects\50 IDOT\50.1478.23_PTB 203_039_W02_US 40 Embarras River\Workfile(Sheets)\0774595-PLAN_SHT2.dgn

HERMANN & Associates, LLC Civil Engineers	USER NAME = Mohammed	DESIGNED - AMH	REVISED -
		DRAWN - AMH	REVISED -
	PLOT SCALE = 40.0000 ' / in.	CHECKED - JAS	REVISED -
	PLOT DATE = 8/7/2025	DATE - 04/25/25	REVISED -

STATE OF ILLINOIS
DEPARTMENT OF TRANSPORTATION

PROPOSED PLAN & PROFILE SHEET

SCALE 1"=20' | SHEET 2 OF 3 SHEETS | STA. 1724+00 TO STA. 1730+00

F.A.S. RTE.	SECTION	COUNTY	TOTAL SHEETS	SHEET NO.
1707	(FXX-B)B	CUMBERLAND	80	19
		CONTRACT NO. 74595		
		ILLINOIS	FED. AID PROJECT	

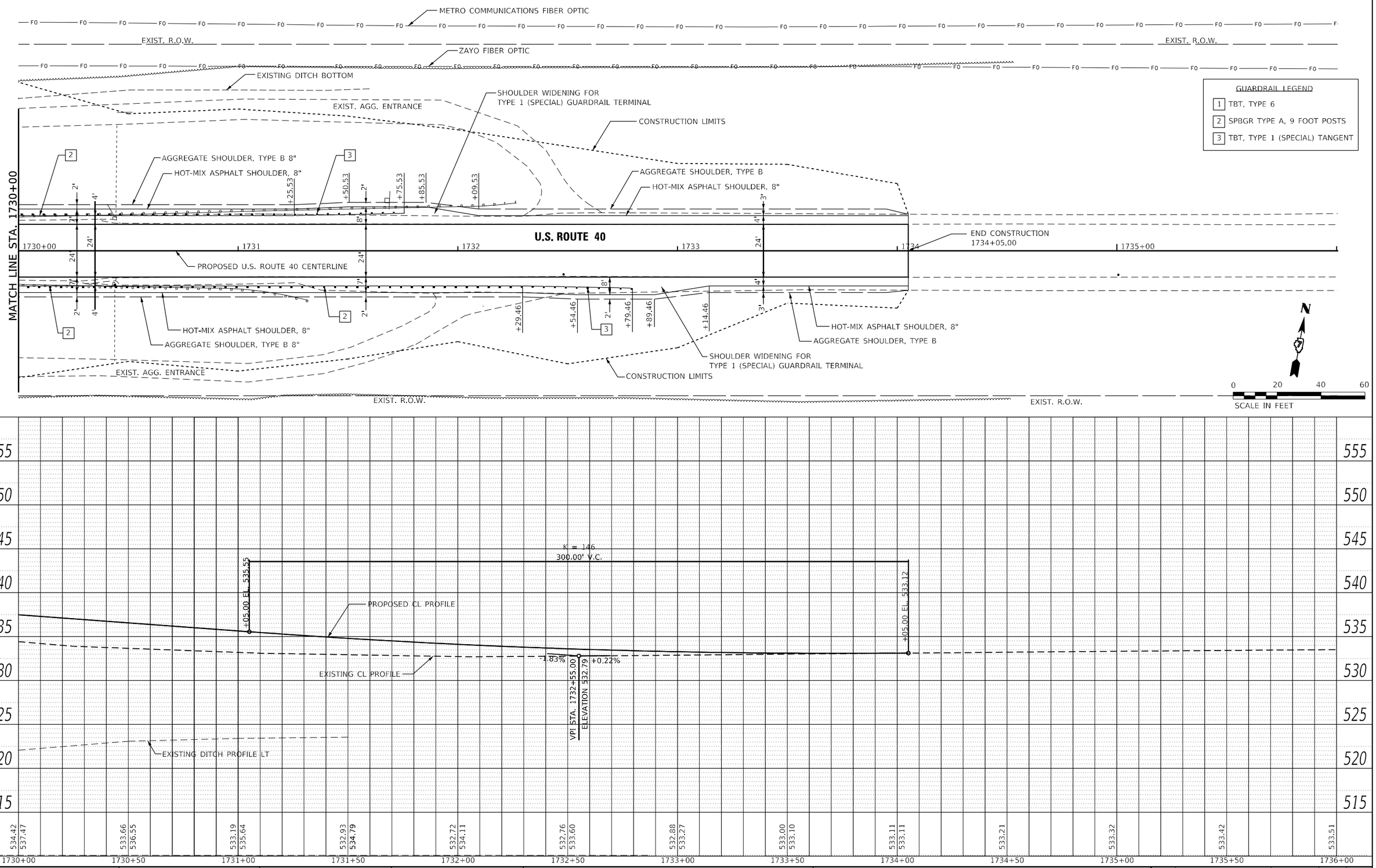

PLAN

SURVEYED
PLOTTED
ALIGNMENT CHECKED
R/ OF WAY CHECKED
CADD FILE NAME

NOTE BOOK NO.

BY: DATE

PROFILE

SURVEYED
PLOTTED
GRADES CHECKED
B.M. NOTED
STRUCTURE NOTATIONS CHKD

NOTE BOOK NO.

BY DATE

MODEL: Default
FILE NAME: F:\Projects\50 IDOT\50.1478.23_PTB 203_039_W02_US 40 Embarras River\Workfile\Sheets\0774595-PLAN_SHT3.dgn

HERMANN & Associates, LLC Civil Engineers	USER NAME = Mohammed	DESIGNED - AMH	REVISED -
		DRAWN - AMH	REVISED -
	PLOT SCALE = 40.0000 ' / in.	CHECKED - JAS	REVISED -
	PLOT DATE = 8/7/2025	DATE - 04/25/25	REVISED -

STATE OF ILLINOIS
DEPARTMENT OF TRANSPORTATION

PROPOSED PLAN & PROFILE SHEET

SCALE 1"=20' | SHEET 3 OF 3 SHEETS | STA. 1730+00 TO STA. 1736+00

F.A.S. RTE.	SECTION	COUNTY	TOTAL SHEETS	SHEET NO.
1707	(FXX-B)B	CUMBERLAND	80	20
		CONTRACT NO. 74595		
		ILLINOIS	FED. AID PROJECT	

SIGN LEGEND

(A) W20-3-48	ROAD CLOSED AHEAD	(D) M4-8a(O)-3024	END DETOUR	(H) M1-4a-36	40	(M) M6-3(O)-3018	↑
(B) W20-2(O)-48	DETOUR AHEAD	(E) R11-3a-6030	ROAD CLOSED X MILES AHEAD LOCAL TRAFFIC ONLY	(I) M5-1L(O)-3018	↰	(N) M6-2R(O)-3030	↗
		(F) M3-2-3015	EAST	(J) M5-1R(O)-3018	↱	(O) M5-2R(O)-3030	↰
(C) M4-8(O)-3015	DETOUR	(G) M3-4-3015	WEST	(K) M6-1L(O)-3018	←	✳ DUAL DISPLAY	
				(L) M6-1R(O)-3018	→		

US 40 CLOSURE BY STANDARDS BLR 21 AND 701901

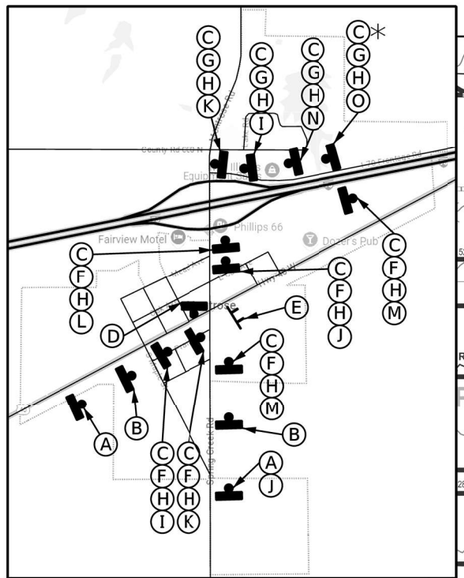

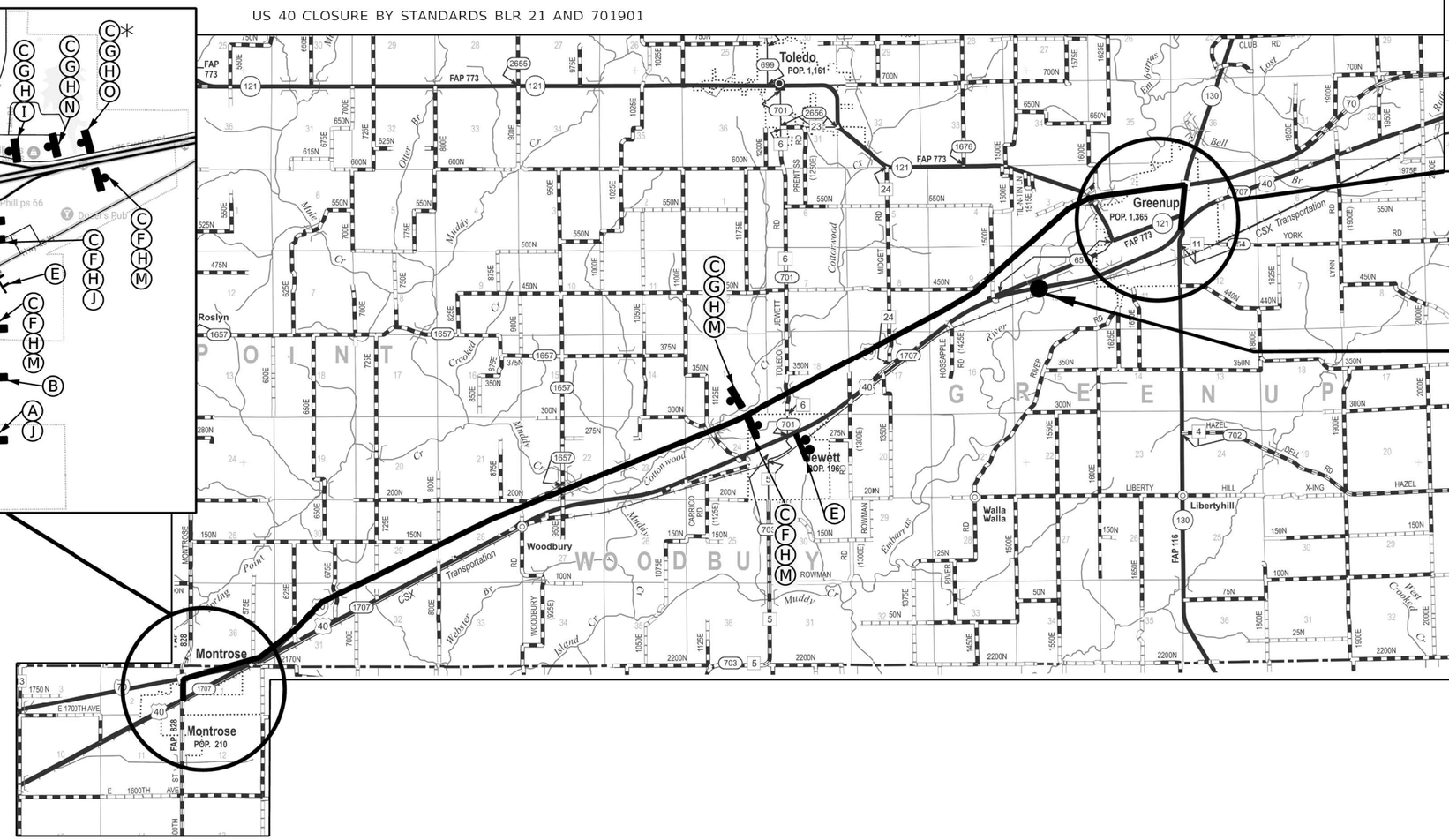

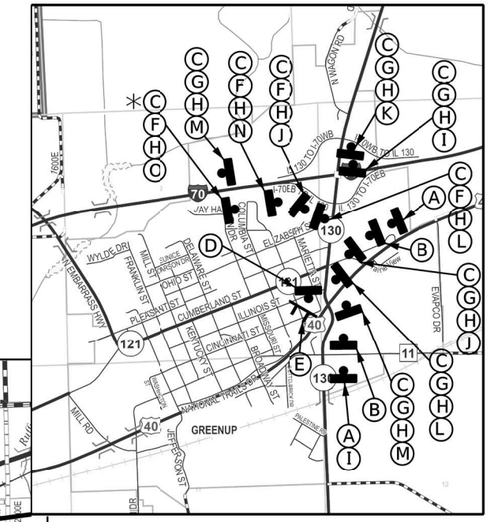

MODEL: Default
FILE NAME: F:\Projects\22-726-241 - IDOT V-V - Hermann\Work Order 01\CAD\Development\Sheets 3.24.25\D774595-PLAN DETOUR SHT.dgn

M SQUARED ENGINEERING, LLC
500 PARK BLVD, SUITE 775
ITASCA, IL
312-429-4976

USER NAME = KGabbert	DESIGNED - TM	REVISED -
	DRAWN - TM	REVISED -
PLOT SCALE = 40.0000 ' / in.	CHECKED - DB	REVISED -
PLOT DATE = 8/8/2025	DATE - 8/8/2025	REVISED -

STATE OF ILLINOIS
DEPARTMENT OF TRANSPORTATION

DETOUR PLAN

SCALE: NTS | SHEET 1 OF 1 SHEETS | STA. TO STA.

F.A.S RTE.	SECTION	COUNTY	TOTAL SHEETS	SHEET NO.
1707	(FXX-B)B	CUMBERLAND	80	21
		CONTRACT NO. 74595		
		ILLINOIS	FED. AID PROJECT	

TEMPORARY BRIDGE TRAFFIC SIGNALS

FOR COVERED BRIDGE ON OLD CUMBERLAND ROAD

N. T. S.

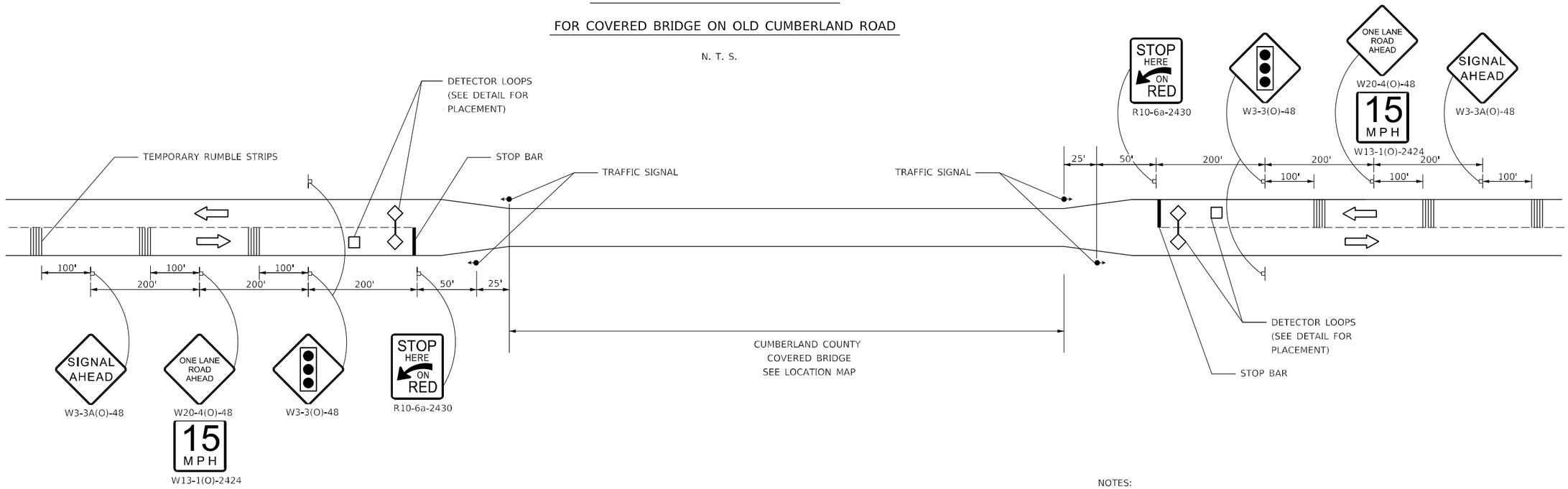

NOTES:

SPACINGS TO BE ADJUSTED/DETERMINED BY ENGINEER BEFORE INSTALLATION

THE EDGE OF THE POST MOUNTED SIGNAL HEAD SHALL BE BETWEEN 2' AND 6' FROM EDGE OF SHOULDER.

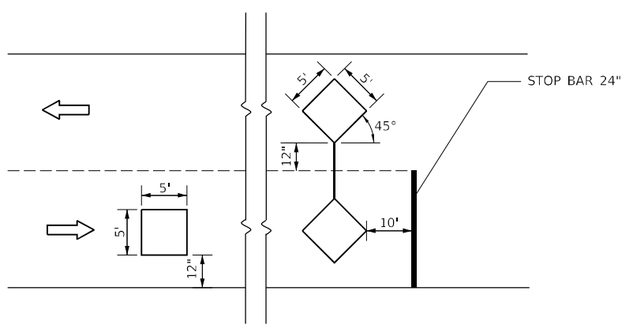

DETECTOR LOOPS

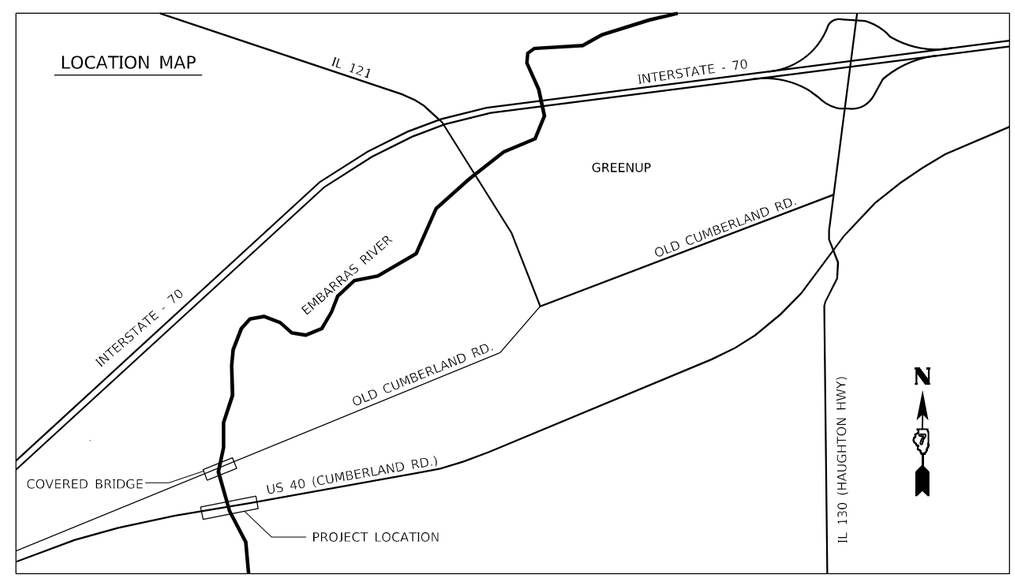

MODEL: Default
FILE NAME: F:\Projects\50 IDOT\50.1476.23_PTB_203_039_W02_US 40 Embarras River\WorkFile\Sheets\0774595-DETAIL_SHT_BRG_TRAF_SIGN.dgn

HERMANN & Associates, LLC Civil Engineers	USER NAME = Mohammed	DESIGNED - MHS	REVISED -	STATE OF ILLINOIS DEPARTMENT OF TRANSPORTATION	OLD CUMBERLAND ROAD BRIDGE LANE CLOSURE
		DRAWN - MHS	REVISED -		
	PLOT SCALE = 40.000 ' / in.	CHECKED - JAS	REVISED -		
	PLOT DATE = 8/8/2025	DATE - 08/01/25	REVISED -		SCALE: N/A SHEET 1 OF 1 SHEETS STA. TO STA.

F.A.S. RTE.	SECTION	COUNTY	TOTAL SHEETS	SHEET NO.
1707	(FXX-B)B	CUMBERLAND	80	22
		CONTRACT NO. 74595		
		ILLINOIS	FED. AID PROJECT	

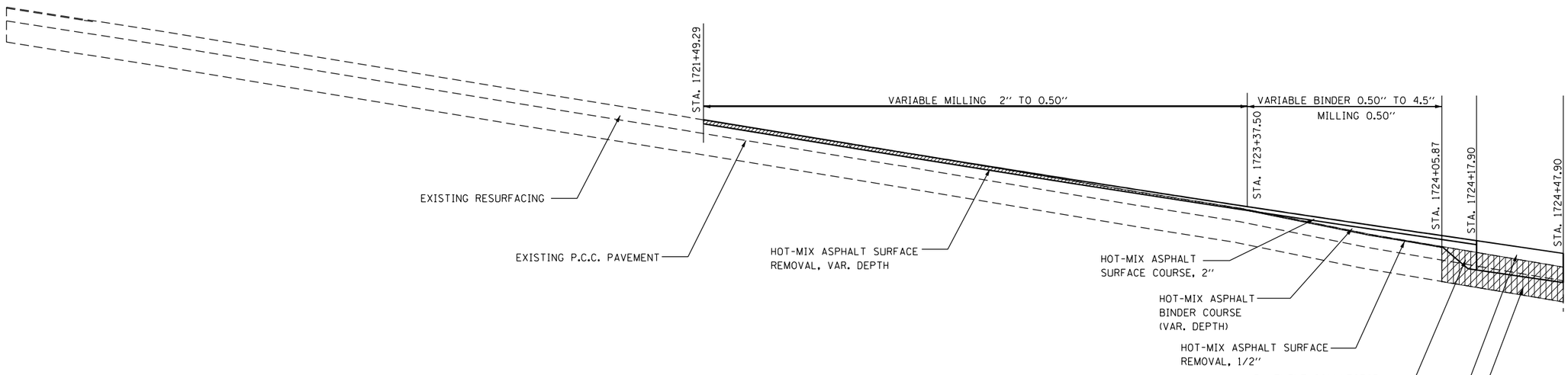

H.M.A. PROFILE GRADE CHANGE DETAIL (WEST END)

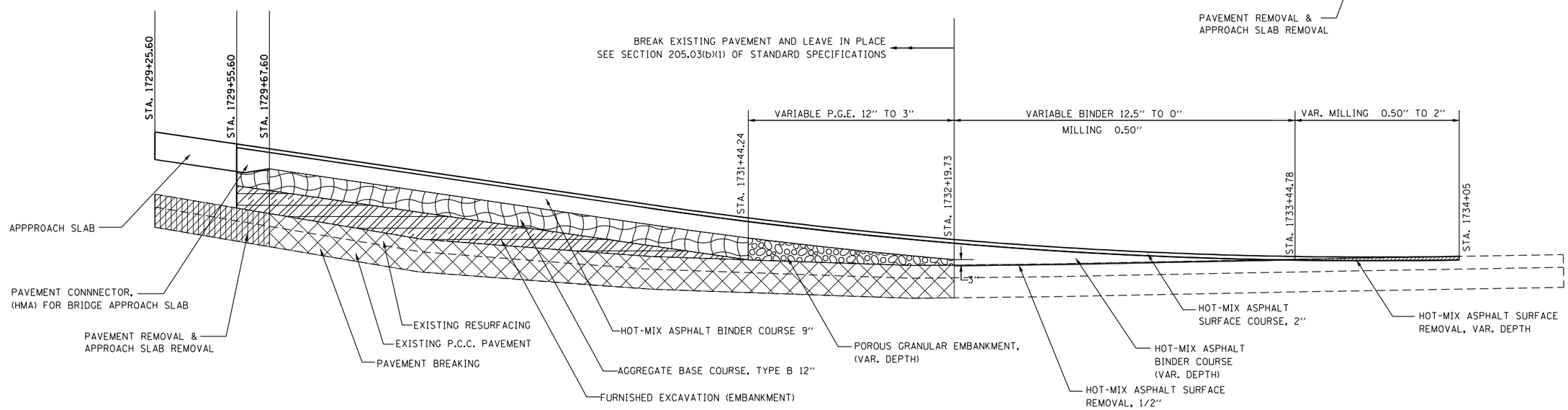

H.M.A. PROFILE GRADE CHANGE DETAIL (EAST END)

MODEL: Default
FILE NAME: F:\Projects\50 TOOTSO_1478.23_PTB 203_039_WO2_US 40 Embarrax River\WorkFileSheets\0774595-PROFILE_DETAIL_SHT.dgn

HERMANN & Associates, LLC Civil Engineers	USER NAME = Mohammed	DESIGNED - AMH	REVISED -	STATE OF ILLINOIS DEPARTMENT OF TRANSPORTATION	MISCELLANEOUS DETAILS		F.A.S. RTE.	SECTION	COUNTY	TOTAL SHEETS / SHEET NO.
		DRAWN - AMH	REVISED -				1707	(FXX-B)B	CUMBERLAND	80 / 23
	PLOT SCALE = 40.000 ' / in.	CHECKED - JAS	REVISED -						CONTRACT NO. 74595	
	PLOT DATE = 8/7/2025	DATE - 04/25/25	REVISED -		SCALE: N/A	SHEET 1 OF 2 SHEETS STA. TO STA.		ILLINOIS	FED. AID PROJECT	

SLOPE STEPS DETAIL

TYPICAL SECTION

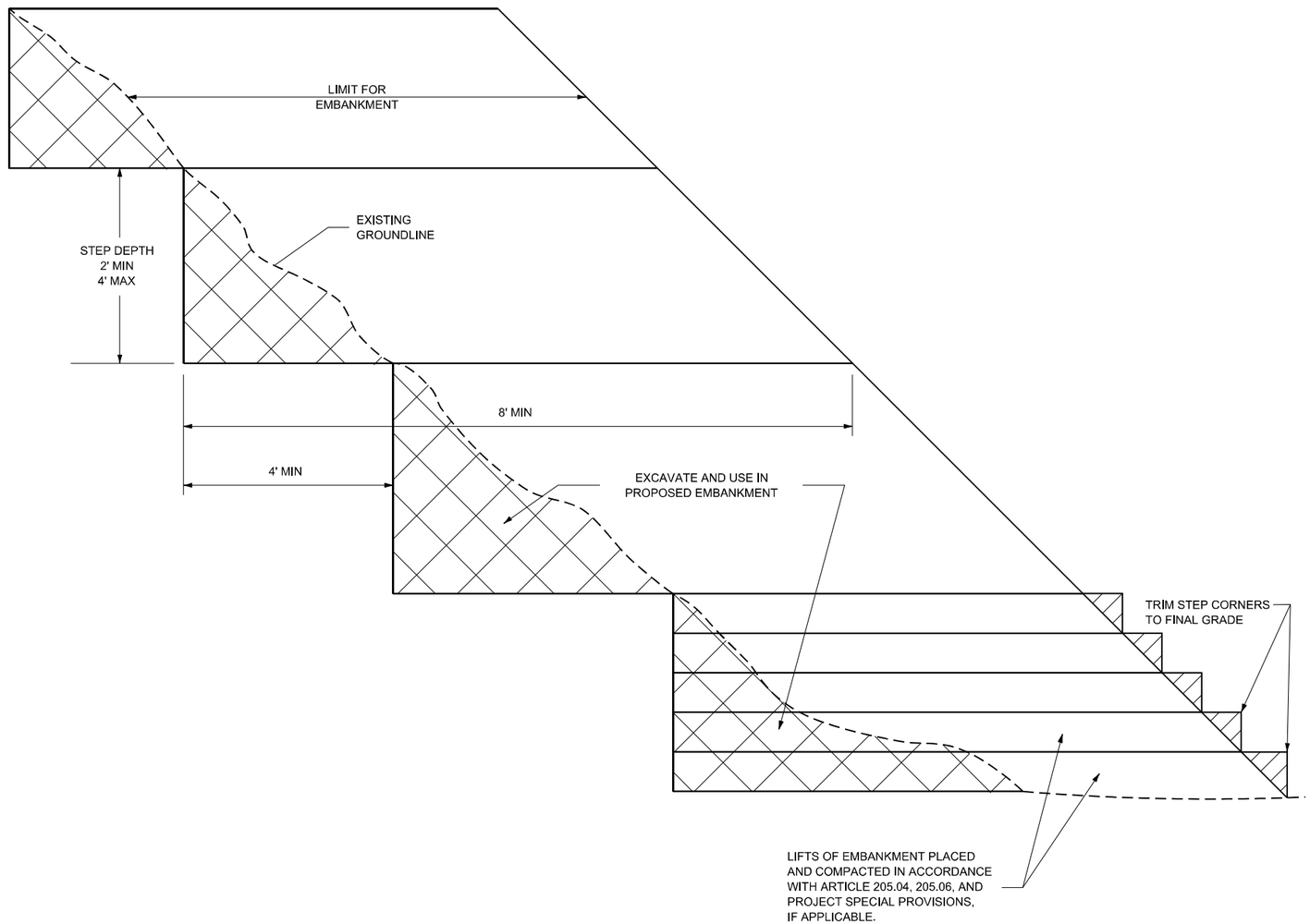

GENERAL NOTES

1. SLOPE STEPS WILL BE REQUIRED FOR ALL FILLS 12" THICK OR GREATER, ALL FILLS WITH A HEIGHT OF 10' OR GREATER, OR ALL FILLS CONSTRUCTED ON EXISTING 1:3 SLOPES OR STEEPER.
2. THIS WORK WILL NOT BE PAID FOR SEPERATELY BUT SHALL BE CONSIDERED INCLUDED IN THE VARIOUS ITEMS OF EXCAVATION.
3. TOPSOIL EXCAVATION MAY BE REQUIRED, SEE PROJECT PAY ITEMS AND/OR SPECIAL PROVISIONS.

REPLACEMENT MATERIAL:

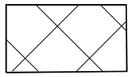

STANDARD EMBANKMENT
(IN ACCORDANCE WITH 205
OF THE STANDARD SPECIFICATION.

MODEL: Default
FILE NAME: F:\Projects\50 IDOT\50.1478.23_PTB 203_039_WO2_US 40 Embankmas River\WorkfileSheets\0774595-SLOPE-STEPS_SHT2.dgn

HERMANN & Associates, LLC Civil Engineers	USER NAME = Mohammed	DESIGNED - AMH	REVISED -	STATE OF ILLINOIS DEPARTMENT OF TRANSPORTATION	MISCELLANEOUS DETAILS
		DRAWN - AMH	REVISED -		
	PLOT SCALE = 40.000 ' / in.	CHECKED - JAS	REVISED -		
	PLOT DATE = 8/7/2025	DATE - 04/25/25	REVISED -		SCALE: N/A SHEET 2 OF 2 SHEETS STA. TO STA.

F.A.S. RTE.	SECTION	COUNTY	TOTAL SHEETS	SHEET NO.
1707	(FXX-B)B	CUMBERLAND	80	24
		CONTRACT NO. 74595		
		ILLINOIS	FED. AID PROJECT	

TWO LANE/TWO WAY

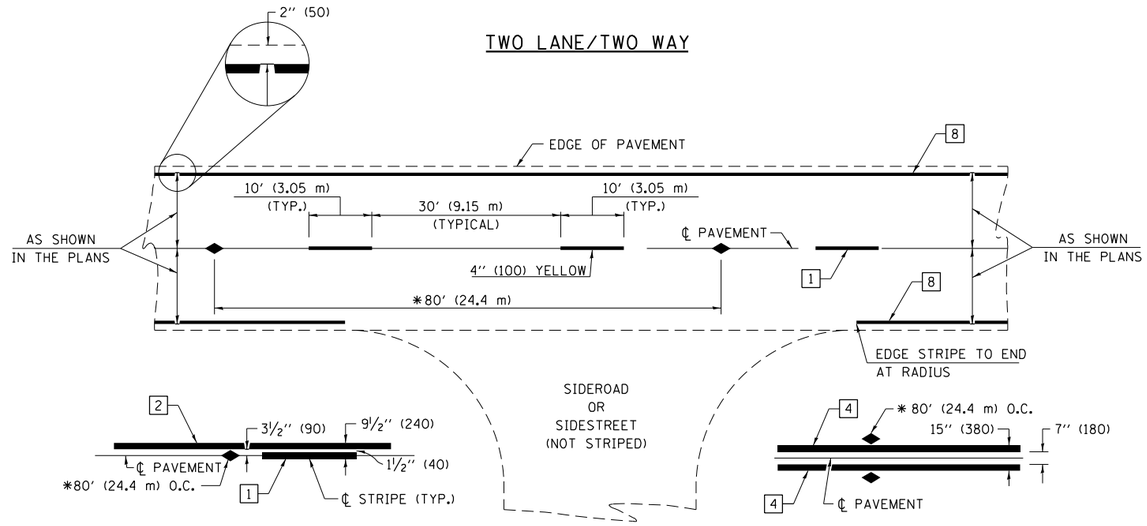

SINGLE NO PASSING

DOUBLE NO PASSING

* REDUCE TO 40' (12.2 m) O.C. ON CURVES WITH POSTED OR ADVISORY SPEEDS OF 45 mph (70 km/h) OR LESS.

PAVEMENT MARKING LEGEND

1. 4" (100) SKIP-DASH (YELLOW)
2. 4" (100) SOLID (YELLOW)
3. 12" (300) DIAGONAL (YELLOW)
4. 4" (100) DOUBLE YELLOW (NARROW)
5. 12" (300) SOLID WHITE
6. RESERVED
7. 6" (150) SKIP-DASH (WHITE)
8. 4" (100) SOLID (WHITE)
9. 12" (300) DIAGONAL (WHITE)
10. 6" (150) SOLID (WHITE)
11. 24" (600) STOP BAR (WHITE)
12. 8" (200) SOLID (WHITE)
13. 4" (100) PARKING WHITE

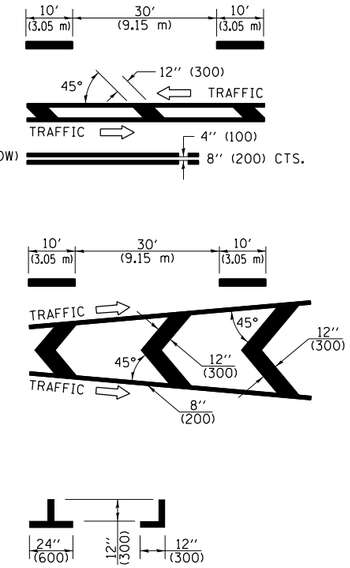

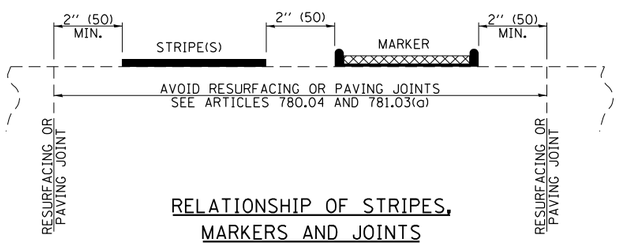

RELATIONSHIP OF STRIPES, MARKERS AND JOINTS

TYPICAL PAVEMENT MARKERS LEGEND

- ◆ TWO-WAY AMBER MARKER
- ▶ ONE-WAY AMBER MARKER
- ▷ ONE-WAY CRYSTAL MARKER

RAISED REFLECTIVE PAVEMENT MARKERS

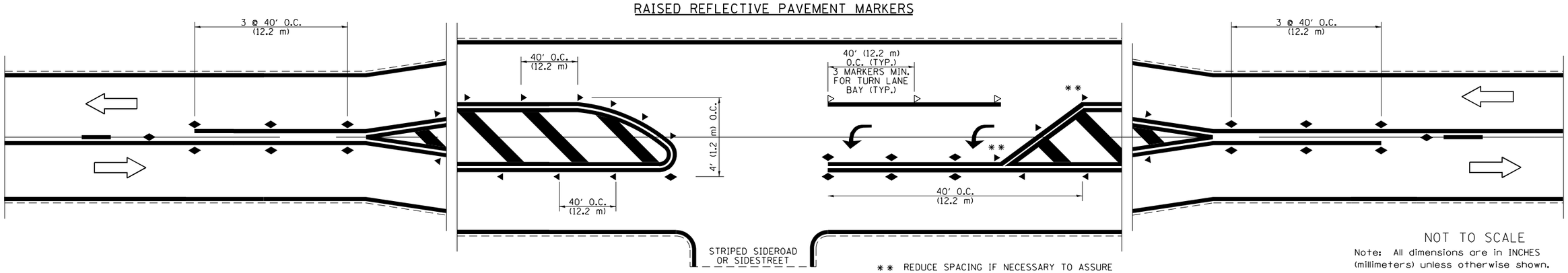

** REDUCE SPACING IF NECESSARY TO ASSURE MARKERS AT CORNER POINTS.

NOT TO SCALE

Note: All dimensions are in INCHES (millimeters) unless otherwise shown.

DISTRICT 7 DETAIL NO. 78000001

FILE NAME =	USER NAME = Mohammed	DESIGNED -	REVISED -
		DRAWN -	REVISED -
	PLOT SCALE = 2.0000 ' / in.	CHECKED -	REVISED -
	PLOT DATE = 8/7/2025	DATE -	REVISED -

STATE OF ILLINOIS
DEPARTMENT OF TRANSPORTATION

PAVEMENT MARKING AND RAISED REFLECTIVE PAVEMENT MARKERS (RURAL & URBAN APPLICATIONS)

SCALE: | SHEET NO. 1 OF 4 SHEETS | STA. | TO STA.

F.A.S RTE.	SECTION	COUNTY	TOTAL SHEETS	SHEET NO.
1707	(FXX-B)B	CUMBERLAND	80	25

CONTRACT NO. 74595

ILLINOIS FED. AID PROJECT

URBAN LEFT TURN

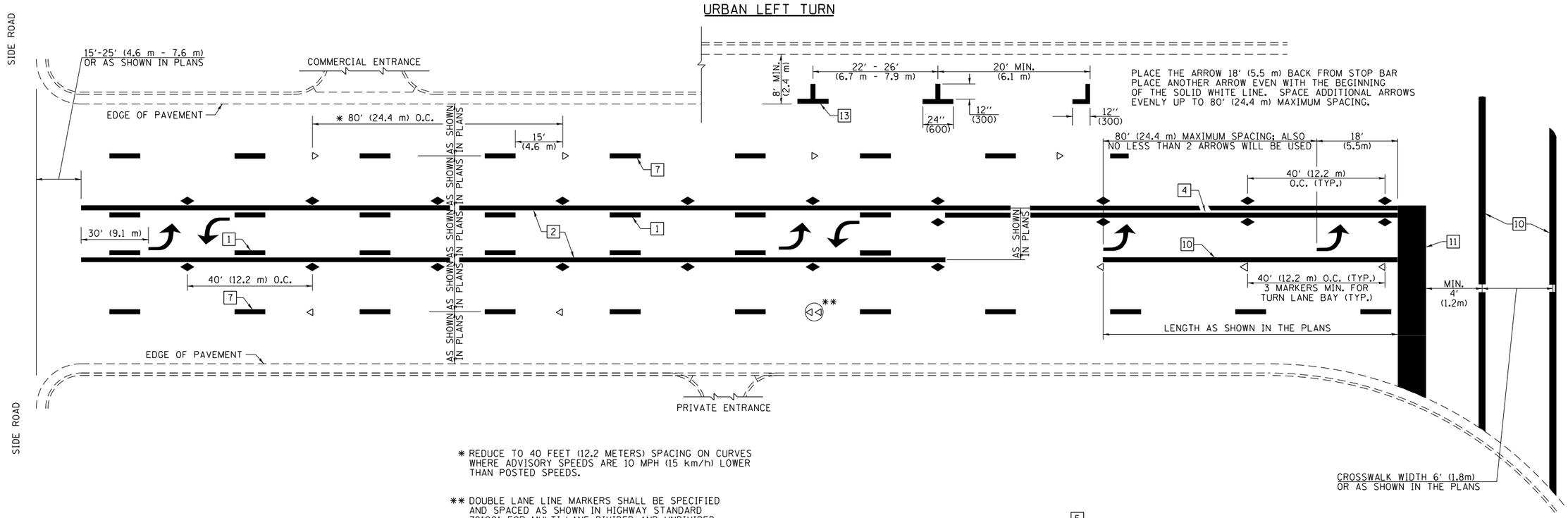

* REDUCE TO 40 FEET (12.2 METERS) SPACING ON CURVES WHERE ADVISORY SPEEDS ARE 10 MPH (15 km/h) LOWER THAN POSTED SPEEDS.

** DOUBLE LANE LINE MARKERS SHALL BE SPECIFIED AND SPACED AS SHOWN IN HIGHWAY STANDARD 781001 FOR MULTI-LANE DIVIDED AND UNDIVIDED HIGHWAYS.

PAVEMENT MARKING LEGEND

1. 4" (100) SKIP-DASH (YELLOW)
2. 4" (100) SOLID (YELLOW)
3. 12" (300) DIAGONAL (YELLOW)
4. 4" (100) DOUBLE YELLOW (NARROW)
5. 12" (300) SOLID WHITE
6. RESERVED
7. 6" (150) SKIP-DASH (WHITE)
8. 4" (100) SOLID (WHITE)
9. 12" (300) DIAGONAL (WHITE)
10. 6" (150) SOLID (WHITE)
11. 24" (600) STOP BAR (WHITE)
12. 8" (200) SOLID (WHITE)
13. 4" (100) PARKING WHITE

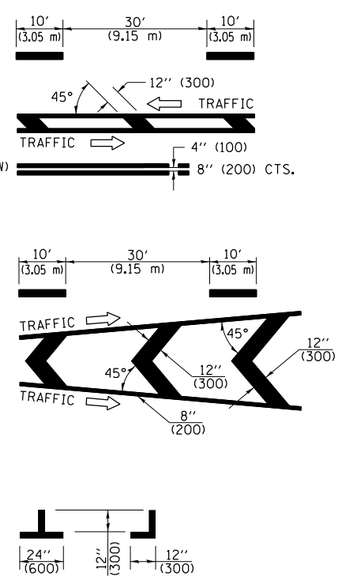

GENERAL NOTES

1. TURN ARROW PAIRS SHALL BE PLACED AT 250'(75 m) INTERVALS AND SHALL BE EVENLY SPACED BETWEEN BOTH ENDS OF THE BIDIRECTIONAL LEFT TURN LANE. USE A MINIMUM OF TWO PAIRS PER BLOCK.
2. THE SOLID YELLOW PAVEMENT MARKINGS [2] SHOULD GENERALLY START OR END NEAR THE RADIUS POINT OF EACH STREET RETURN EXCEPT WHERE ONE OR BOTH ENDS WOULD INCLUDE STOP BARS.
3. THE SKIP-DASH PAVEMENT MARKINGS [1] OR [7] SHOULD BE CENTERED BETWEEN BOTH ENDS OF EACH CITY BLOCK AND SHALL BE PLACED SO THEY LINE UP ACROSS FROM EACH OTHER.
4. USE LARGE ARROW SIZE FOR BOTH RURAL AND URBAN LOCATIONS. (SEE LAST PAGE OF SECTION 780x FOR SYMBOLS TABLE)
5. LANE LINE EXTENSIONS SHALL BE THE SAME COLOR AND WIDTH AS THE LANE LINE BEING EXTENDED.

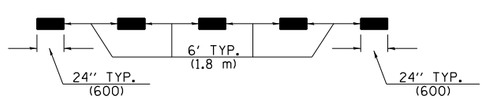

LANE LINE EXTENSIONS

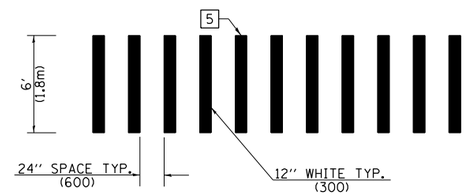

CROSSWALK DETAIL
(DECATUR CITY LIMITS ONLY)

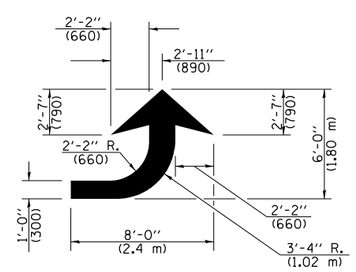

LEFT ARROW
REVERSE FOR RIGHT ARROW
AREA = 15.6 SQ. FT. (1.47 m^2)
(WHITE)

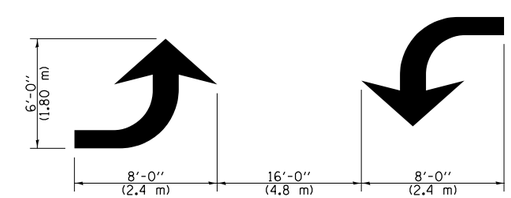

TYPICAL DOUBLE
TURN ARROWS (WHITE)

NOT TO SCALE

Note: All dimensions are in INCHES (millimeters) unless otherwise shown.

DISTRICT 7 DETAIL NO. 78000001

FILE NAME =	USER NAME = Mohammed	DESIGNED -	REVISED -
		DRAWN -	REVISED -
	PLOT SCALE = 2.0000 ' / in.	CHECKED -	REVISED -
	PLOT DATE = 8/7/2025	DATE -	REVISED -

STATE OF ILLINOIS
DEPARTMENT OF TRANSPORTATION

PAVEMENT MARKING AND RAISED REFLECTIVE PAVEMENT MARKERS (RURAL & URBAN APPLICATIONS)

SCALE: | SHEET NO. 2 OF 4 SHEETS | STA. | TO STA.

F.A.S RTE.	SECTION	COUNTY	TOTAL SHEETS	SHEET NO.
1707	(FXX-B)B	CUMBERLAND	80	26

CONTRACT NO. 74595

ILLINOIS FED. AID PROJECT

ISLAND

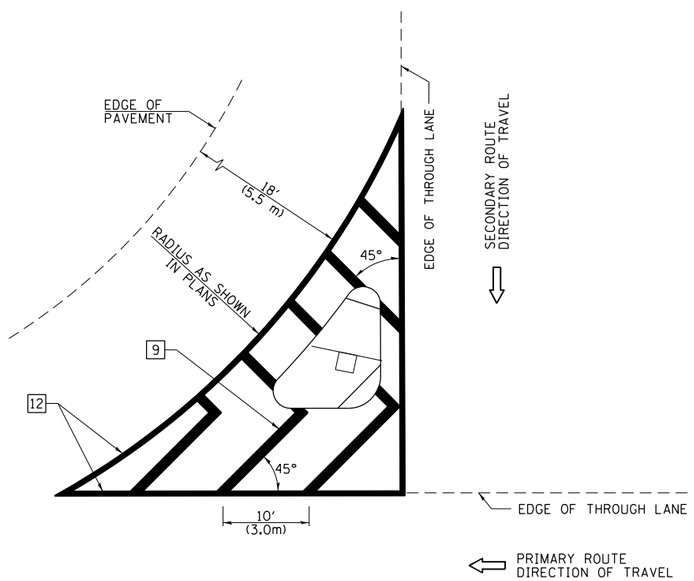

GENERAL NOTES

1. RAISED AND CORRUGATED MEDIANS SHALL BE OUTLINED WITH [2] IF PRESENT.
2. SOME OF THE INFORMATION INCLUDED WITH THIS DETAIL MAY NOT BE APPLICABLE TO THIS IMPROVEMENT.
3. PAVEMENT MARKINGS ARE TO BE EXTENDED THROUGH OMISSIONS WHEN APPLICABLE.
4. FINAL PAVEMENT MARKINGS SHALL BE IN PLACE PRIOR TO PLACING ANY RAISED REFLECTIVE PAVEMENT MARKERS.
5. THE FOLLOWING CRITERIA SHALL BE USED FOR SELECTING THE DIAGONAL PAVEMENT MARKING SPACING:

< 30 MPH	(< 50 km/h)	15′ (4.5 m)
30-45 MPH	(50-75 km/h	20′ (6.0 m)
> 45 MPH	(> 75 km/h	30′ (9.0 m)

PAVEMENT MARKING LEGEND

1. 4″ (100) SKIP-DASH (YELLOW)
2. 4″ (100) SOLID (YELLOW)
3. 12″ (300) DIAGONAL (YELLOW)
4. 4″ (100) DOUBLE YELLOW (NARROW)
5. 12″ (300) SOLID WHITE
6. RESERVED
7. 6″ (150) SKIP-DASH (WHITE)
8. 4″ (100) SOLID (WHITE)
9. 12″ (300) DIAGONAL (WHITE)
10. 6″ (150) SOLID (WHITE)
11. 24″ (600) STOP BAR (WHITE)
12. 8″ (200) SOLID (WHITE)
13. 4″ (100) PARKING WHITE

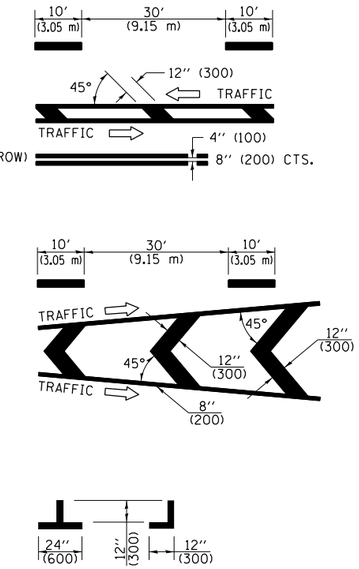

RURAL LEFT TURN STRIPING

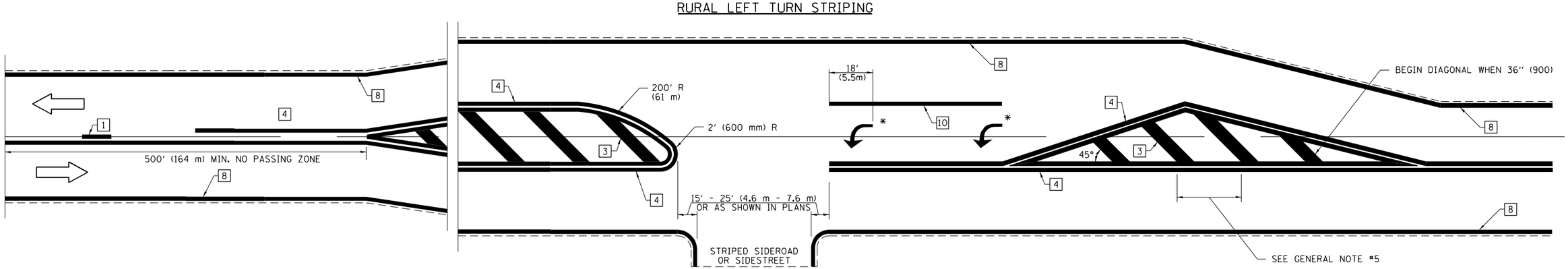

* PLACE AN ARROW 18′ (5.5 m) BACK FROM STOP BAR. PLACE ANOTHER ARROW EVEN WITH THE BEGINNING OF THE SOLID WHITE LINE. SPACE ADDITIONAL ARROWS EVENLY UP TO 80′ (24.4 m) MAXIMUM SPACING. USE MINIMUM OF 2 ARROWS.

NOT TO SCALE

Note: All dimensions are in INCHES (millimeters) unless otherwise shown.

DISTRICT 7 DETAIL NO. 78000001

FILE NAME =	USER NAME = Mohammed	DESIGNED -	REVISED -
		DRAWN -	REVISED -
	PLOT SCALE = 2.0000 ′ / in.	CHECKED -	REVISED -
	PLOT DATE = 8/7/2025	DATE -	REVISED -

STATE OF ILLINOIS
DEPARTMENT OF TRANSPORTATION

PAVEMENT MARKING AND RAISED REFLECTIVE PAVEMENT MARKERS (RURAL & URBAN APPLICATIONS)

SCALE: | SHEET NO. 3 OF 4 SHEETS | STA. | TO STA.

F.A.S RTE.	SECTION	COUNTY	TOTAL SHEETS	SHEET NO.
1707	(FXX-B)B	CUMBERLAND	80	27
		CONTRACT NO. 74595		

ILLINOIS FED. AID PROJECT

PAVEMENT MARKINGS AT RAILROAD-HIGHWAY GRADE CROSSING

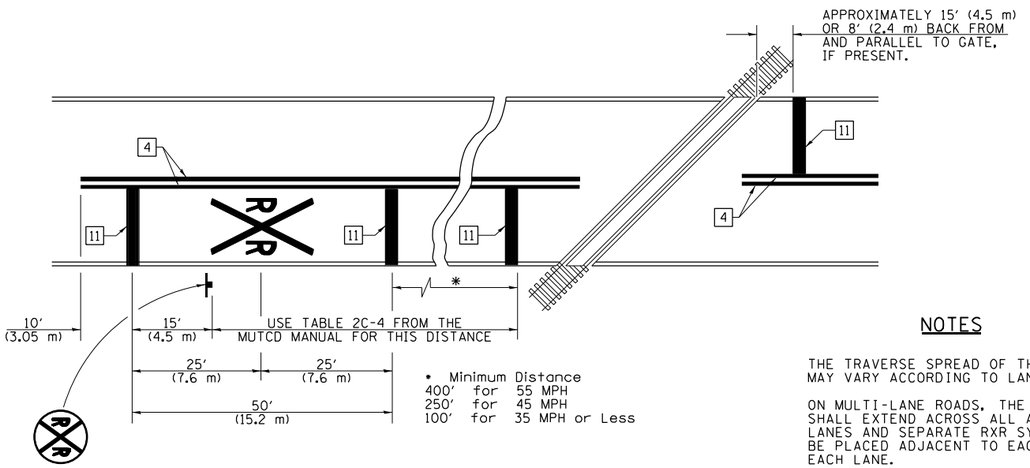

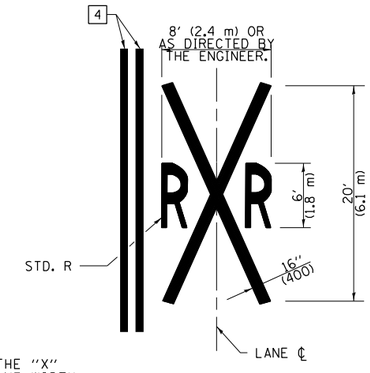

NOTES

THE TRAVERSE SPREAD OF THE "X" MAY VARY ACCORDING TO LANE WIDTH.

ON MULTI-LANE ROADS, THE STOP LINES SHALL EXTEND ACROSS ALL APPROACH LANES AND SEPARATE RXR SYMBOLS SHALL BE PLACED ADJACENT TO EACH OTHER IN EACH LANE.

WHEN THE PAVEMENT MARKING SYMBOL IS USED, A PORTION OF THE SYMBOL SHOULD BE LOCATED DIRECTLY ADJACENT TO THE ADVANCE WARNING SIGN (W10-1) AS PLACED BY TABLE II-1, CONDITION B OF THE MUTCD.

PAVEMENT MARKING LEGEND

1	4" (100) SKIP-DASH (YELLOW)
2	4" (100) SOLID (YELLOW)
3	12" (300) DIAGONAL (YELLOW)
4	4" (100) DOUBLE YELLOW (NARROW)
5	12" (300) SOLID WHITE
6	RESERVED
7	6" (150) SKIP-DASH (WHITE)
8	4" (100) SOLID (WHITE)
9	12" (300) DIAGONAL (WHITE)
10	6" (150) SOLID (WHITE)
11	24" (600) STOP BAR (WHITE)
12	8" (200) SOLID (WHITE)
13	4" (100) PARKING WHITE

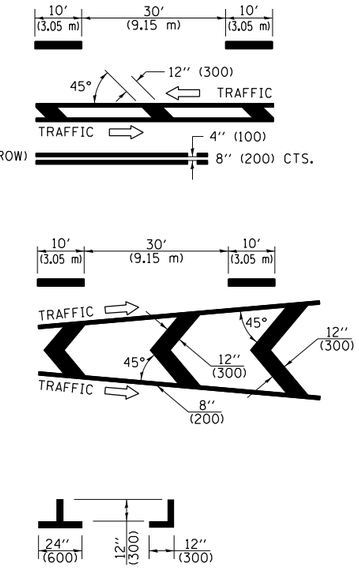

RAILROAD CROSSING WITH INTERCONNECT ONLY

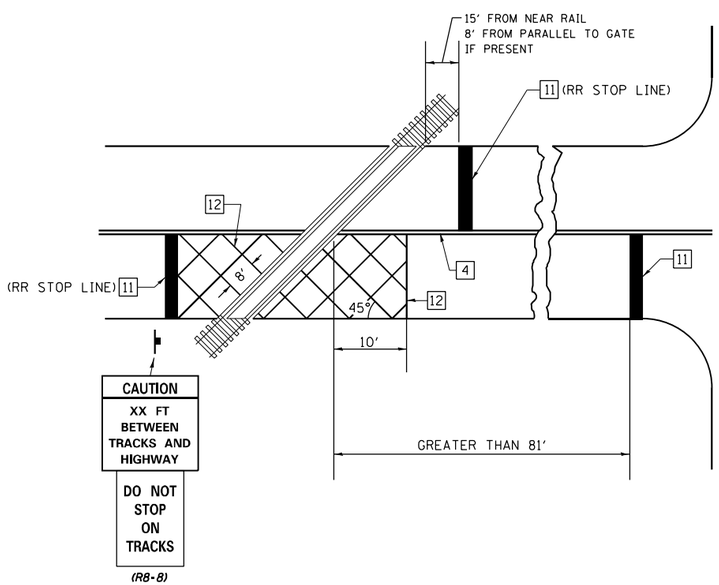

RAILROAD CROSSING WITH INTERCONNECT AND PRE-SIGNALS

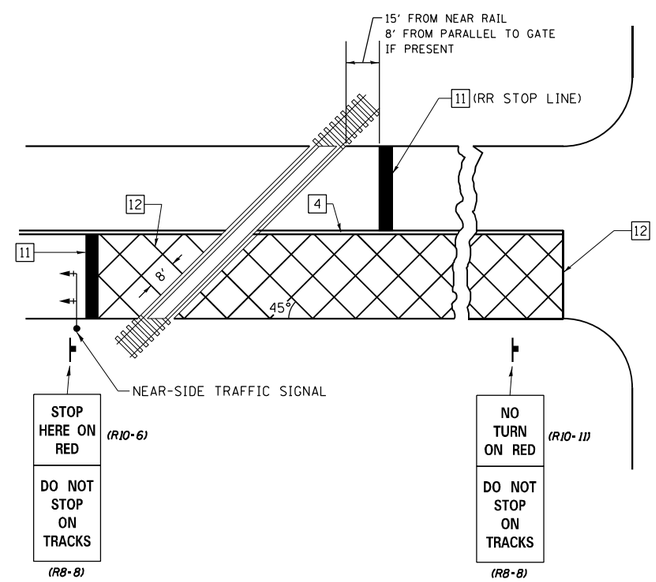

SUPPLEMENTAL PAVEMENT MARKING TREATMENT FOR RAILROAD-HIGHWAY GRADE CROSSING

GENERAL NOTES

1. SUPPLEMENTAL PAVEMENT MARKINGS TO BE INSTALLED ONLY ON APPROACHES TO INTERSECTIONS CONTROLLED BY TRAFFIC SIGNALS WHICH ARE INTERCONNECTED WITH THE RAILROAD WARNING SIGNALS.
2. EXTEND PAVEMENT MARKINGS TO THE INTERSECTION ONLY WHERE NEAR-SIDE TRAFFIC SIGNALS ARE USED.

NOT TO SCALE

Note: All dimensions are in INCHES (millimeters) unless otherwise shown.

DISTRICT 7 DETAIL NO. 78000001

FILE NAME =	USER NAME = Mohammed	DESIGNED -	REVISED -
		DRAWN -	REVISED -
	PLOT SCALE = 2.0000 ' / in.	CHECKED -	REVISED -
	PLOT DATE = 8/7/2025	DATE -	REVISED -

STATE OF ILLINOIS
DEPARTMENT OF TRANSPORTATION

PAVEMENT MARKING AND RAISED REFLECTIVE PAVEMENT MARKERS (RURAL & URBAN APPLICATIONS)

SCALE: | SHEET NO. 4 OF 4 SHEETS | STA. | TO STA.

F.A.S RTE.	SECTION	COUNTY	TOTAL SHEETS	SHEET NO.
1707	(FXX-B)B	CUMBERLAND	80	28
		CONTRACT NO. 74595		

ILLINOIS FED. AID PROJECT

Bench Mark: BM 201: Chiseled square on wingwall at northwest corner of SN: 018-0008
Station 1724+56, 15.6' Left, Elevation = 542.27

Existing Structure: Structure No. 018-0008 was originally constructed in 1946 under F.A. Rte. 12(S.B.I. RT II), Section F-X-BF at station 726+91.75. The superstructure consists of a 6 span continuous non-composite W36 steel beams, with a 7" reinforced concrete deck, all supported on solid concrete piers and stub abutments over timber piles. In 1984, a new 1½" bituminous wearing surface with waterproofing membrane was added as well as a new bridge rail. The deck was patched, joints were reconstructed, and beam ends over pier 3 were repaired and/or replaced.

Road Closure with marked route detour for maintenance of traffic.

No Salvage.

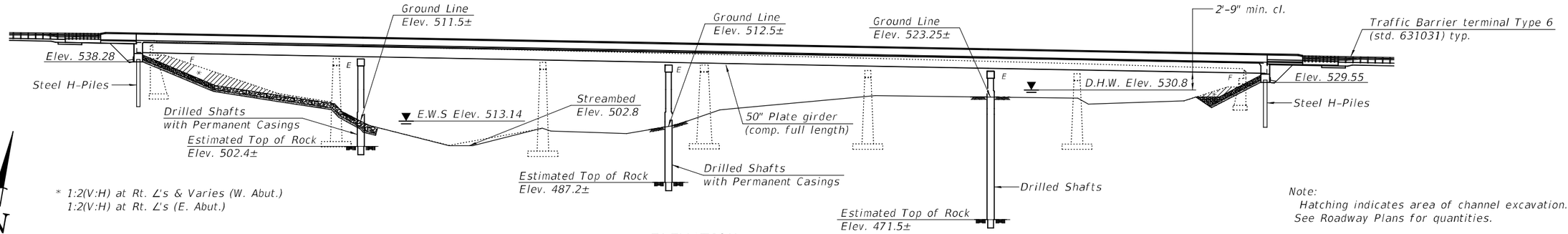

* 1:2(V:H) at Rt. ∠'s & Varies (W. Abut.)
1:2(V:H) at Rt. ∠'s (E. Abut.)

Note:
Hatching indicates area of channel excavation.
See Roadway Plans for quantities.

ELEVATION

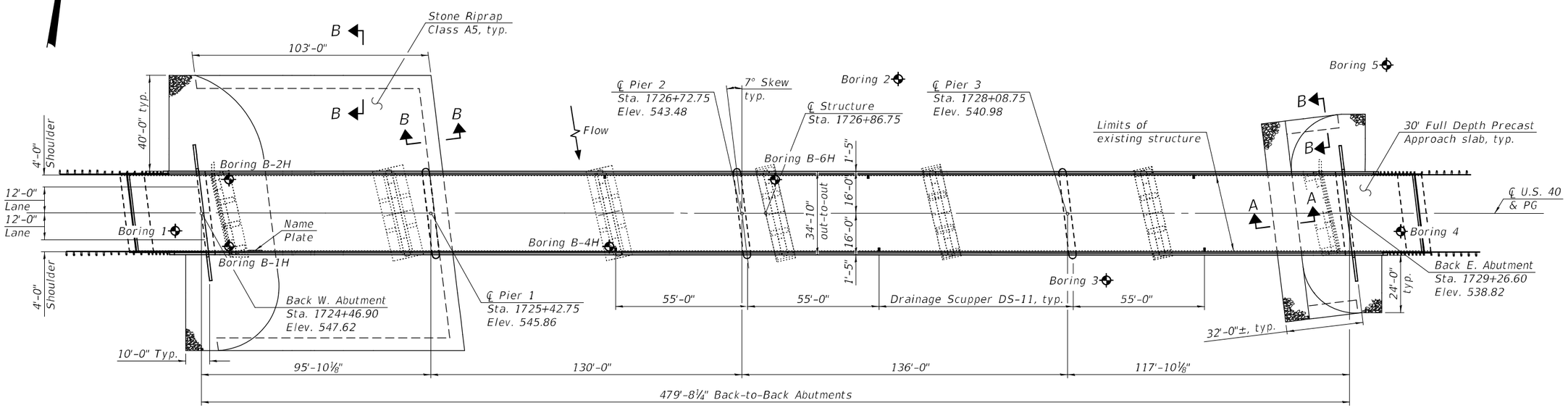

PLAN

DESIGN STRESSES

FIELD UNITS

f'c = 3,500 psi
f'c = 4,000 psi (Superstructure Concrete)
fy = 60,000 psi (Reinforcement)
fy = 50,000 psi (M270 Grade 50)

All structural steel shall be metallized.

DESIGN SPECIFICATIONS

2020 AASHTO LRFD Bridge Design Specifications, 9th Edition

LICENSED STRUCTURAL ENGINEER
JAYME F. SCHIFF
081-005540
STATE OF ILLINOIS

EXPIRES 11-30-2026

LOADING HL-93

Allow 50#/sq. ft. for future wearing surface.

SEISMIC DATA

Seismic Performance Zone (SPZ) = 2
Design Spectral Acceleration at 1.0 sec. (SD1) = 0.195g
Design Spectral Acceleration at 0.2 sec. (SDS) = 0.428g
Soil Site Class = D

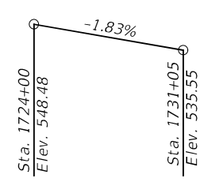

PROFILE GRADE

(Along ℄ U.S. 40)

Up to ¼ inch to be ground off the bridge deck and the bridge approach slabs. The Profile Grade shows the final grade after grinding.

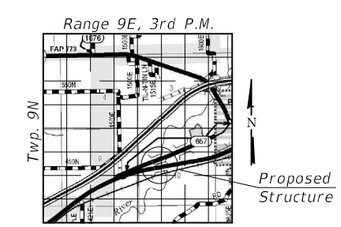

LOCATION SKETCH

GENERAL PLAN & ELEVATION
U.S. 40 OVER EMBARRAS RIVER
F.A.S. Rte. 1707-SEC. (FXX-B)B
CUMBERLAND COUNTY
STATION 1726+86.75
STRUCTURE NO. 018-0068

DESIGNED -	RYAN P. NEGANGARD	EXAMINED	ENGINEER OF BRIDGE DESIGN
CHECKED -	DAVID H. RICHTER	PASSED	ENGINEER OF BRIDGES AND STRUCTURES
DRAWN -	ALAN JOHNSTONE / D.A.P.	DATE -	10/7/2025
CHECKED -	R.P.N. / D.H.R.	REVISED -	
		REVISED -	

STATE OF ILLINOIS
DEPARTMENT OF TRANSPORTATION

SHEET 1 OF 41 SHEETS

F.A.S. RTE.	SECTION	COUNTY	TOTAL SHEETS	SHEET NO.
1707	(FXX-B)B	CUMBERLAND	80	29

CONTRACT NO. 74595
ILLINOIS | FED. AID PROJECT

MODEL: 01800068-74595-001
FILE NAME: pw:\\ildot-pw.bentley.com:PWIDOT\Documents\IDOT Offices\Bureau of Bridges and Structures\Projects\01800068\CADD Plans\01800068-74595.dgn
10/7/2025 7:40:25 AM

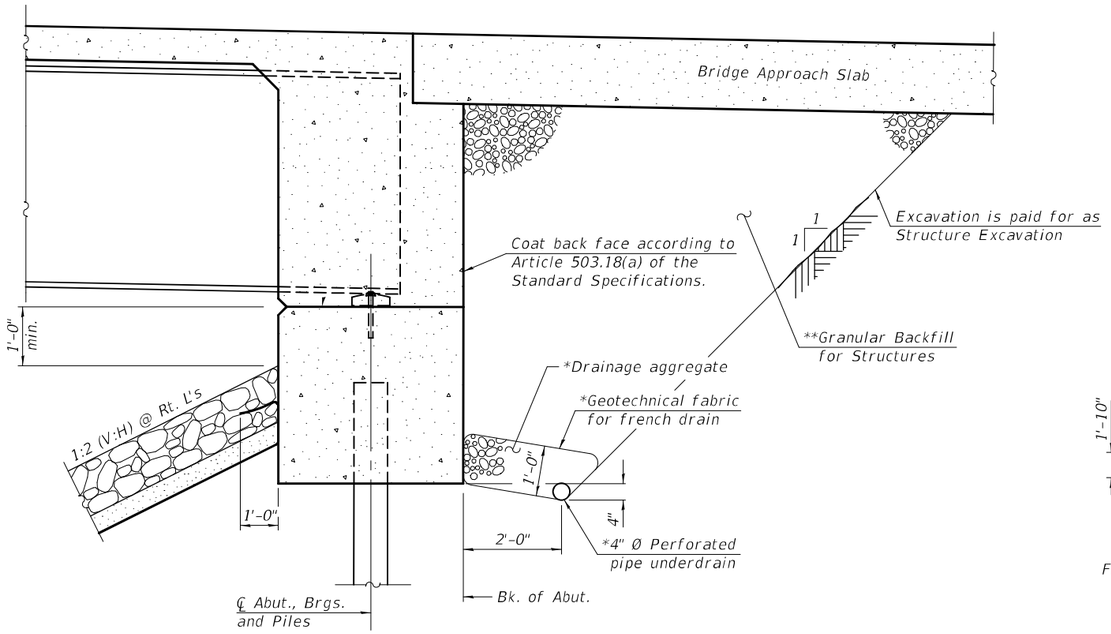

SECTION THRU INTEGRAL ABUTMENT

(Horiz. dim. @ Rt. ∠'s)

Notes:

All drainage system components shall extend to 2'-0" from the end of each wingwall except an outlet pipe shall extend until intersecting with the side slopes. The pipes shall drain into concrete headwalls. (See Article 601.05 of the Standard Specifications and Highway Standard 601101).

* Included in the cost of Pipe Underdrains for Structures.

**Granular Backfill for Structures shall follow Std. Spec. 586 except the Coarse Aggregate shall be Grade CA 7, CA 11, or CA 14. Granular backfill behind the abutments shall be compacted according to Article 205.06 of the Standard Specifications.

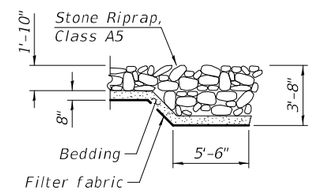

SECTION B-B

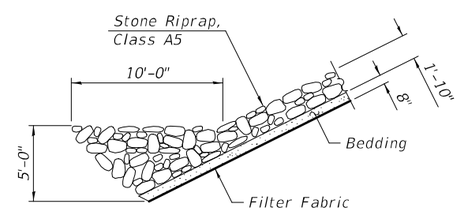

SECTION A-A

GENERAL NOTES

Fasteners shall be ASTM F3148 Type 1, mechanically galvanized bolts in metallized areas. Bolts 7/8 in. diameter, holes 15/16 in. diameter, unless otherwise noted. See special provision for "ASTM F3148 High Strength Steel Bolts".

Calculated weight of Structural Steel = 570,780 lbs. (M270 Grade 50)

Calculated weight of Structural Steel = 46,990 lbs. (M270 Grade 36)

All new structural steel shall be metallized and coated with a clear sealer (System 1). See Special Provision for "Metallizing of Structural Steel."

No field welding is permitted except as specified in the contract documents.

Reinforcement bars designated (E) shall be epoxy coated.

Bearing seat surfaces shall be constructed or adjusted to the designated elevations within a tolerance of 1/8 inch (0.01 ft.). Adjustment shall be made either by grinding the surface or by shimming the bearings.

The existing structural steel coating contains lead. The Contractor shall take appropriate precautions to address the presence of lead on this project.

Layout of the slope protection system may be varied to suit ground conditions in the field as directed by the Engineer.

The embankment configuration shown shall be the minimum that must be placed and compacted prior to construction of the abutments.

STATION 1726+86.75
BUILT 20 BY
STATE OF ILLINOIS
F.A.S. RTE. 1707 SEC. (FXX-B)B
LOADING HL-93
STRUCTURE NO. 018-0068

NAME PLATE

See Std. 515001

WATERWAY INFORMATION

Existing Overtopping Elev. = 532.64 at Sta. 1755+96
Proposed Overtopping Elev. = 532.64 at Sta. 1755+96
Drainage Area = 1021.0 sq. mi.

Flood	Freq. Yr.	Disch. Ft^3/s	Opening Ft^2 Exist.	Opening Ft^2 Prop.	Nat. H.W.E.	Head - Ft. Exist.	Head - Ft. Prop.	Headwater El. Exist.	Headwater El. Prop.
	10	17,830	4,440	4,660	528.5	0.2	0.1	528.7	528.6
Design	50	26,620	5,290	5,290	530.8	0.5	0.4	531.3	531.2
Base	100	30,360	5,630	5,990	531.6	0.6	0.5	532.2	532.1
Scour Design Check	200	34,200	5,850	6,370	532.5	0.6	0.5	533.1	533.0
Max. Calc.	500	39,200	6,270	6,990	533.6	0.8	0.7	534.4	534.3

10 year velocity through existing bridge = 4.0 ft/s
10 year velocity through proposed bridge = 3.8 ft/s

DESIGN SCOUR ELEVATION TABLE

Event / Limit State	Design Scour Elevations (ft.) W. Abut.	Pier 1	Pier 2	Pier 3	E. Abut.	Item 113
Q100	538.28	501.2	490.2	490.2	529.55	5
Q200	538.28	501.1	489.6	489.6	529.55	
Design	538.28	501.2	490.2	490.2	529.55	
Check	538.28	501.1	489.6	489.6	529.55	

INDEX OF SHEETS

TOTAL BILL OF MATERIAL

ITEM	UNIT	SUPER	SUB	TOTAL
Stone Riprap, Class A5	Sq. Yd.		1845	1845
Filter Fabric	Sq. Yd.		1845	1845
Removal of Existing Structures	Each	1		1
Structure Excavation	Cu. Yd.		269	269
Concrete Structures	Cu. Yd.		285.0	285.0
Concrete Superstructure	Cu. Yd.	624.0		624.0
Protective Coat	Sq. Yd.	2380		2380
Furnishing and Erecting Structural Steel	L. Sum	1		1
Stud Shear Connectors	Each	6840		6840
Reinforcement Bars, Epoxy Coated	Pound	156040	122300	278340
Bar Splicers	Each		400	400
Mechanical Splicers	Each		198	198
Furnishing Steel Piles HP14x89	Foot		540	540
Driving Piles	Foot		540	540
Test Pile Steel HP14x89	Each		2	2
Name Plates	Each	1		1
Permanent Casing	Foot		114	114
Drilled Shaft in Soil	Cu. Yd.		207.6	207.6
Drilled Shaft in Rock	Cu. Yd.		58.1	58.1
Preformed Joint Strip Seal	Foot	68		68
Elastomeric Bearing Assembly, Type I	Each	18		18
Anchor Bolts, 1"	Each	24		24
Anchor Bolts, 1½"	Each	36		36
Granular Backfill for Structures	Cu. Yd.		153	153
Bridge Deck Grooving (Longitudinal)	Sq. Yd.	1434		1434
Full Depth Precast Bridge Approach Slab	Sq. Ft.	1853		1853
Drainage Scuppers, DS-11	Each	6		6
Diamond Grinding (Bridge Section)	Sq. Yd.	1779		1779
Pipe Underdrains for Structures 4"	Foot		147	147
Bar Terminators	Each	124	356	480

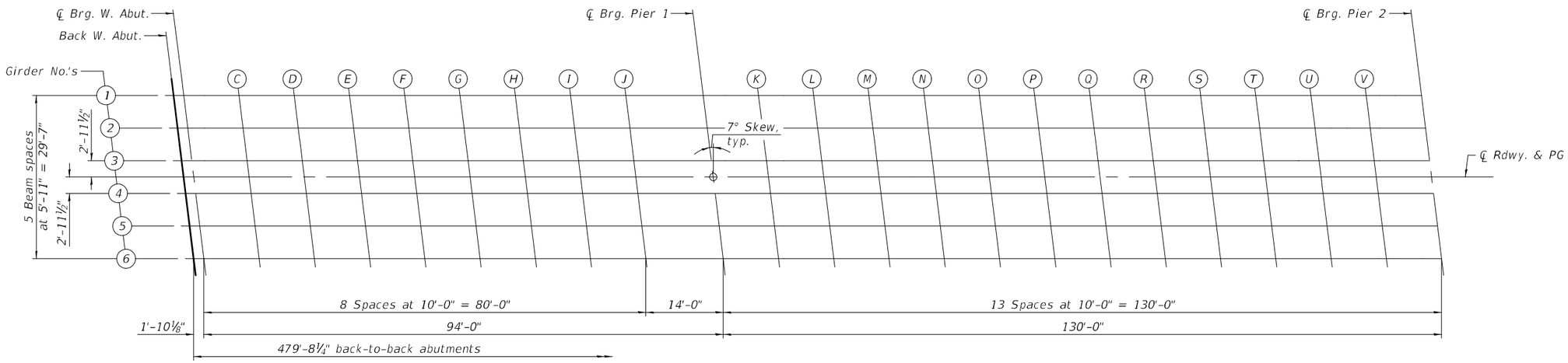

PLAN

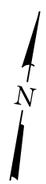

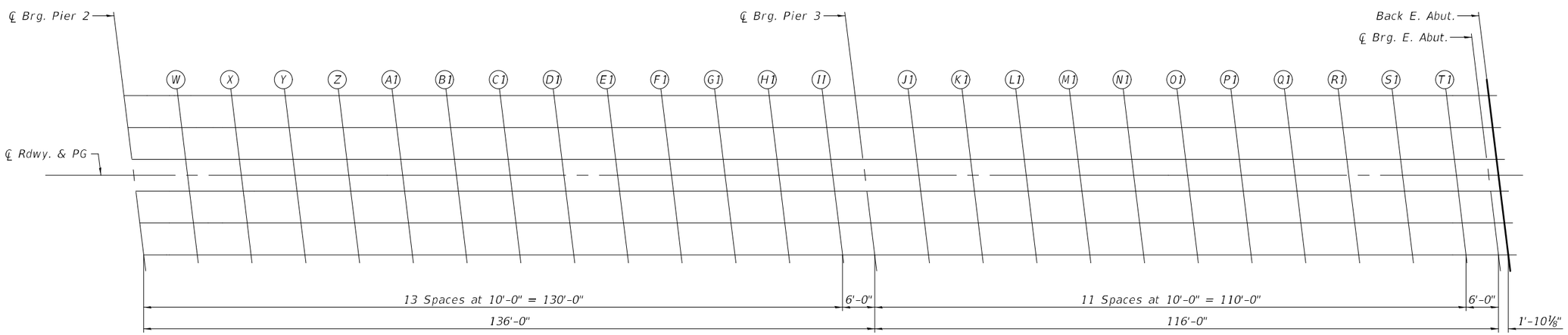

PLAN

MODEL: 0180068-74595-003
FILE NAME: pw:\\ildot-pw.bentley.com:PWIDOT\Documents\IDOT Offices\Bureau of Bridges and Structures\Projects\0180068\CADD Plans\0180068-74595.dgn
10/8/2025 6:43:27 AM

DESIGNED -	RYAN P. NEGANGARD	EXAMINED	ENGINEER OF BRIDGE DESIGN
CHECKED -	DAVID H. RICHTER		
DRAWN -	DENNIS A. POP	PASSED	ENGINEER OF BRIDGES AND STRUCTURES
CHECKED -	R.P.N. / D.H.R.		

DATE - 10/7/2025
REVISED -
REVISED -

STATE OF ILLINOIS
DEPARTMENT OF TRANSPORTATION

TOP OF SLAB ELEVATIONS
STRUCTURE NO. 018-0068

SHEET 3 OF 41 SHEETS

F.A.S. RTE.	SECTION	COUNTY	TOTAL SHEETS	SHEET NO.
1707	(FXX-B)B	CUMBERLAND	80	31
		CONTRACT NO. 74595		
		ILLINOIS	FED. AID PROJECT	

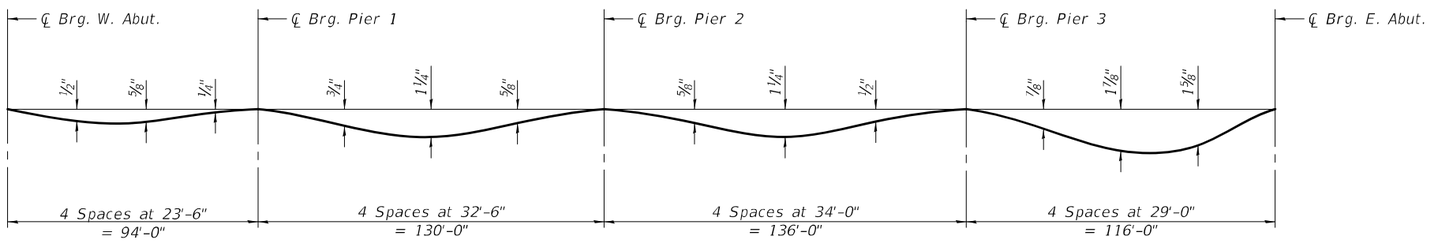

DEAD LOAD DEFLECTION DIAGRAM

(Includes weight of concrete only.)

Note:
The above deflections are not to be used in the field if the Engineer is working from the grade elevations adjusted for dead load deflections and grinding as shown on sheets 4 thru 7 of 41.

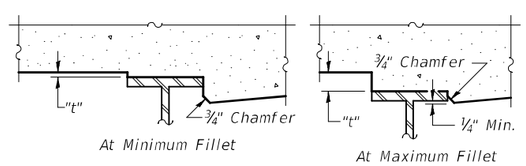

To determine "t": After all structural steel has been erected, elevations of the top flanges of the beams shall be taken at intervals shown on sheet 3 of 41. These elevations subtracted from the "Theoretical Grade Elevations Adjusted for Dead Load Deflection and Grinding" shown on sheets 4 thru 7 of 41, minus the initial slab thickness prior to grinding, equals the fillet heights "t" above top flange of beams.

The slab is to be ground after curing to achieve smoothness, but the slab is not to be ground to elevations below the "Theoretical Grade Elevations" shown on sheets 4 thru 7 of 41. For grinding the deck, see Special Provisions.

FILLET HEIGHTS

GIRDER 1

Location	Station	Offset	Theoretical Grade Elevations	Theoretical Grade Elevations Adjusted For Dead Load Deflection and Grinding
Back W. Abut.	1724+45.09	-14.79	547.42	547.44
℄ Brg. W. Abut.	1724+46.93	-14.79	547.38	547.40
C	1724+56.93	-14.79	547.20	547.24
D	1724+66.93	-14.79	547.02	547.08
E	1724+76.93	-14.79	546.83	546.90
F	1724+86.93	-14.79	546.65	546.72
G	1724+96.93	-14.79	546.47	546.53
H	1725+06.93	-14.79	546.28	546.33
I	1725+16.93	-14.79	546.10	546.14
J	1725+26.93	-14.79	545.92	545.95
℄ Brg. Pier 1	1725+40.93	-14.79	545.66	545.68
K	1725+50.93	-14.79	545.48	545.52
L	1725+60.93	-14.79	545.29	545.35
M	1725+70.93	-14.79	545.11	545.19
N	1725+80.93	-14.79	544.93	545.02
O	1725+90.93	-14.79	544.74	544.85
P	1726+00.93	-14.79	544.56	544.68
Q	1726+10.93	-14.79	544.38	544.49
R	1726+20.93	-14.79	544.19	544.30
S	1726+30.93	-14.79	544.01	544.10
T	1726+40.93	-14.79	543.83	543.90
U	1726+50.93	-14.79	543.64	543.70
V	1726+60.93	-14.79	543.46	543.50
℄ Brg. Pier 2	1726+70.93	-14.79	543.28	543.30
W	1726+80.93	-14.79	543.09	543.13
X	1726+90.93	-14.79	542.91	542.96
Y	1727+00.93	-14.79	542.73	542.79
Z	1727+10.93	-14.79	542.54	542.62
A1	1727+20.93	-14.79	542.36	542.45
B1	1727+30.93	-14.79	542.17	542.28
C1	1727+40.93	-14.79	541.99	542.11
D1	1727+50.93	-14.79	541.81	541.91
E1	1727+60.93	-14.79	541.62	541.71
F1	1727+70.93	-14.79	541.44	541.51
G1	1727+80.93	-14.79	541.26	541.31
H1	1727+90.93	-14.79	541.07	541.12
I1	1728+00.93	-14.79	540.89	540.92
℄ Brg. Pier 3	1728+06.93	-14.79	540.78	540.80
J1	1728+16.93	-14.79	540.60	540.64
K1	1728+26.93	-14.79	540.41	540.48
L1	1728+36.93	-14.79	540.23	540.33
M1	1728+46.93	-14.79	540.05	540.17
N1	1728+56.93	-14.79	539.86	540.02
O1	1728+66.93	-14.79	539.68	539.85
P1	1728+76.93	-14.79	539.50	539.66
Q1	1728+86.93	-14.79	539.31	539.47
R1	1728+96.93	-14.79	539.13	539.27
S1	1729+06.93	-14.79	538.95	539.04
T1	1729+16.93	-14.79	538.76	538.81
℄ Brg. E. Abut.	1729+22.93	-14.79	538.65	538.67
Back E. Abut.	1729+24.78	-14.79	538.62	538.64

GIRDER 2

Location	Station	Offset	Theoretical Grade Elevations	Theoretical Grade Elevations Adjusted For Dead Load Deflection and Grinding
Back W. Abut.	1724+45.81	-8.88	547.51	547.53
℄ Brg. W. Abut.	1724+47.66	-8.88	547.47	547.49
C	1724+57.66	-8.88	547.29	547.33
D	1724+67.66	-8.88	547.11	547.16
E	1724+77.66	-8.88	546.92	546.99
F	1724+87.66	-8.88	546.74	546.81
G	1724+97.66	-8.88	546.56	546.62
H	1725+07.66	-8.88	546.37	546.42
I	1725+17.66	-8.88	546.19	546.23
J	1725+27.66	-8.88	546.01	546.04
℄ Brg. Pier 1	1725+41.66	-8.88	545.75	545.77
K	1725+51.66	-8.88	545.57	545.60
L	1725+61.66	-8.88	545.38	545.44
M	1725+71.66	-8.88	545.20	545.28
N	1725+81.66	-8.88	545.02	545.11
O	1725+91.66	-8.88	544.83	544.94
P	1726+01.66	-8.88	544.65	544.77
Q	1726+11.66	-8.88	544.47	544.58
R	1726+21.66	-8.88	544.28	544.38
S	1726+31.66	-8.88	544.10	544.19
T	1726+41.66	-8.88	543.91	543.99
U	1726+51.66	-8.88	543.73	543.79
V	1726+61.66	-8.88	543.55	543.58
℄ Brg. Pier 2	1726+71.66	-8.88	543.36	543.38
W	1726+81.66	-8.88	543.18	543.22
X	1726+91.66	-8.88	543.00	543.05
Y	1727+01.66	-8.88	542.81	542.88
Z	1727+11.66	-8.88	542.63	542.71
A1	1727+21.66	-8.88	542.45	542.54
B1	1727+31.66	-8.88	542.26	542.37
C1	1727+41.66	-8.88	542.08	542.20
D1	1727+51.66	-8.88	541.90	542.00
E1	1727+61.66	-8.88	541.71	541.80
F1	1727+71.66	-8.88	541.53	541.60
G1	1727+81.66	-8.88	541.35	541.40
H1	1727+91.66	-8.88	541.16	541.21
I1	1728+01.66	-8.88	540.98	541.01
℄ Brg. Pier 3	1728+07.66	-8.88	540.87	540.89
J1	1728+17.66	-8.88	540.69	540.73
K1	1728+27.66	-8.88	540.50	540.57
L1	1728+37.66	-8.88	540.32	540.42
M1	1728+47.66	-8.88	540.14	540.26
N1	1728+57.66	-8.88	539.95	540.11
O1	1728+67.66	-8.88	539.77	539.94
P1	1728+77.66	-8.88	539.59	539.75
Q1	1728+87.66	-8.88	539.40	539.56
R1	1728+97.66	-8.88	539.22	539.36
S1	1729+07.66	-8.88	539.04	539.13
T1	1729+17.66	-8.88	538.85	538.90
℄ Brg. E. Abut.	1729+23.66	-8.88	538.74	538.76
Back E. Abut.	1729+25.51	-8.88	538.71	538.73

GIRDER 3

Location	Station	Offset	Theoretical Grade Elevations	Theoretical Grade Elevations Adjusted For Dead Load Deflection and Grinding
Back W. Abut.	1724+46.54	-2.96	547.58	547.60
℄ Brg. W. Abut.	1724+48.39	-2.96	547.55	547.57
C	1724+58.39	-2.96	547.36	547.40
D	1724+68.39	-2.96	547.18	547.24
E	1724+78.39	-2.96	547.00	547.06
F	1724+88.39	-2.96	546.81	546.88
G	1724+98.39	-2.96	546.63	546.70
H	1725+08.39	-2.96	546.45	546.50
I	1725+18.39	-2.96	546.26	546.30
J	1725+28.39	-2.96	546.08	546.11
℄ Brg. Pier 1	1725+42.39	-2.96	545.82	545.84
K	1725+52.39	-2.96	545.64	545.68
L	1725+62.39	-2.96	545.46	545.52
M	1725+72.39	-2.96	545.27	545.35
N	1725+82.39	-2.96	545.09	545.18
O	1725+92.39	-2.96	544.91	545.01
P	1726+02.39	-2.96	544.72	544.84
Q	1726+12.39	-2.96	544.54	544.66
R	1726+22.39	-2.96	544.36	544.46
S	1726+32.39	-2.96	544.17	544.26
T	1726+42.39	-2.96	543.99	544.06
U	1726+52.39	-2.96	543.81	543.86
V	1726+62.39	-2.96	543.62	543.66
℄ Brg. Pier 2	1726+72.39	-2.96	543.44	543.46
W	1726+82.39	-2.96	543.26	543.29
X	1726+92.39	-2.96	543.07	543.13
Y	1727+02.39	-2.96	542.89	542.96
Z	1727+12.39	-2.96	542.71	542.79
A1	1727+22.39	-2.96	542.52	542.62
B1	1727+32.39	-2.96	542.34	542.45
C1	1727+42.39	-2.96	542.16	542.27
D1	1727+52.39	-2.96	541.97	542.07
E1	1727+62.39	-2.96	541.79	541.87
F1	1727+72.39	-2.96	541.61	541.67
G1	1727+82.39	-2.96	541.42	541.48
H1	1727+92.39	-2.96	541.24	541.28
I1	1728+02.39	-2.96	541.06	541.08
℄ Brg. Pier 3	1728+08.39	-2.96	540.95	540.97
J1	1728+18.39	-2.96	540.76	540.81
K1	1728+28.39	-2.96	540.58	540.65
L1	1728+38.39	-2.96	540.40	540.49
M1	1728+48.39	-2.96	540.21	540.34
N1	1728+58.39	-2.96	540.03	540.18
O1	1728+68.39	-2.96	539.85	540.02
P1	1728+78.39	-2.96	539.66	539.83
Q1	1728+88.39	-2.96	539.48	539.64
R1	1728+98.39	-2.96	539.30	539.44
S1	1729+08.39	-2.96	539.11	539.21
T1	1729+18.39	-2.96	538.93	538.98
℄ Brg. E. Abut.	1729+24.39	-2.96	538.82	538.84
Back E. Abut.	1729+26.23	-2.96	538.78	538.80

℄ RDWY. & PG

Location	Station	Offset	Theoretical Grade Elevations	Theoretical Grade Elevations Adjusted For Dead Load Deflection and Grinding
Back W. Abut.	1724+46.90	0.00	547.62	547.64
℄ Brg. W. Abut.	1724+48.75	0.00	547.59	547.61
C	1724+58.75	0.00	547.40	547.44
D	1724+68.75	0.00	547.22	547.28
E	1724+78.75	0.00	547.04	547.10
F	1724+88.75	0.00	546.85	546.92
G	1724+98.75	0.00	546.67	546.73
H	1725+08.75	0.00	546.49	546.54
I	1725+18.75	0.00	546.30	546.34
J	1725+28.75	0.00	546.12	546.15
℄ Brg. Pier 1	1725+42.75	0.00	545.86	545.88
K	1725+52.75	0.00	545.68	545.72
L	1725+62.75	0.00	545.50	545.55
M	1725+72.75	0.00	545.31	545.39
N	1725+82.75	0.00	545.13	545.22
O	1725+92.75	0.00	544.94	545.05
P	1726+02.75	0.00	544.76	544.88
Q	1726+12.75	0.00	544.58	544.70
R	1726+22.75	0.00	544.39	544.50
S	1726+32.75	0.00	544.21	544.30
T	1726+42.75	0.00	544.03	544.10
U	1726+52.75	0.00	543.84	543.90
V	1726+62.75	0.00	543.66	543.70
℄ Brg. Pier 2	1726+72.75	0.00	543.48	543.50
W	1726+82.75	0.00	543.29	543.33
X	1726+92.75	0.00	543.11	543.16
Y	1727+02.75	0.00	542.93	543.00
Z	1727+12.75	0.00	542.74	542.83
A1	1727+22.75	0.00	542.56	542.66
B1	1727+32.75	0.00	542.38	542.49
C1	1727+42.75	0.00	542.19	542.31
D1	1727+52.75	0.00	542.01	542.11
E1	1727+62.75	0.00	541.83	541.91
F1	1727+72.75	0.00	541.64	541.71
G1	1727+82.75	0.00	541.46	541.51
H1	1727+92.75	0.00	541.28	541.32
I1	1728+02.75	0.00	541.09	541.12
℄ Brg. Pier 3	1728+08.75	0.00	540.98	541.00
J1	1728+18.75	0.00	540.80	540.85
K1	1728+28.75	0.00	540.62	540.69
L1	1728+38.75	0.00	540.43	540.53
M1	1728+48.75	0.00	540.25	540.37
N1	1728+58.75	0.00	540.07	540.22
O1	1728+68.75	0.00	539.88	540.06
P1	1728+78.75	0.00	539.70	539.87
Q1	1728+88.75	0.00	539.52	539.68
R1	1728+98.75	0.00	539.33	539.47
S1	1729+08.75	0.00	539.15	539.24
T1	1729+18.75	0.00	538.97	539.01
℄ Brg. E. Abut.	1729+24.75	0.00	538.86	538.88
Back E. Abut.	1729+26.60	0.00	538.82	538.84

GIRDER 4

Location	Station	Offset	Theoretical Grade Elevations	Theoretical Grade Elevations Adjusted For Dead Load Deflection and Grinding
Back W. Abut.	1724+47.27	2.96	547.57	547.59
℄ Brg. W. Abut.	1724+49.11	2.96	547.53	547.55
C	1724+59.11	2.96	547.35	547.39
D	1724+69.11	2.96	547.17	547.23
E	1724+79.11	2.96	546.98	547.05
F	1724+89.11	2.96	546.80	546.87
G	1724+99.11	2.96	546.62	546.68
H	1725+09.11	2.96	546.43	546.49
I	1725+19.11	2.96	546.25	546.29
J	1725+29.11	2.96	546.07	546.10
℄ Brg. Pier 1	1725+43.11	2.96	545.81	545.83
K	1725+53.11	2.96	545.63	545.67
L	1725+63.11	2.96	545.44	545.50
M	1725+73.11	2.96	545.26	545.34
N	1725+83.11	2.96	545.08	545.17
O	1725+93.11	2.96	544.89	545.00
P	1726+03.11	2.96	544.71	544.83
Q	1726+13.11	2.96	544.53	544.65
R	1726+23.11	2.96	544.34	544.45
S	1726+33.11	2.96	544.16	544.25
T	1726+43.11	2.96	543.98	544.05
U	1726+53.11	2.96	543.79	543.85
V	1726+63.11	2.96	543.61	543.65
℄ Brg. Pier 2	1726+73.11	2.96	543.43	543.45
W	1726+83.11	2.96	543.24	543.28
X	1726+93.11	2.96	543.06	543.11
Y	1727+03.11	2.96	542.88	542.95
Z	1727+13.11	2.96	542.69	542.78
A1	1727+23.11	2.96	542.51	542.61
B1	1727+33.11	2.96	542.33	542.44
C1	1727+43.11	2.96	542.14	542.26
D1	1727+53.11	2.96	541.96	542.06
E1	1727+63.11	2.96	541.78	541.86
F1	1727+73.11	2.96	541.59	541.66
G1	1727+83.11	2.96	541.41	541.46
H1	1727+93.11	2.96	541.23	541.27
I1	1728+03.11	2.96	541.04	541.07
℄ Brg. Pier 3	1728+09.11	2.96	540.93	540.95
J1	1728+19.11	2.96	540.75	540.79
K1	1728+29.11	2.96	540.57	540.64
L1	1728+39.11	2.96	540.38	540.48
M1	1728+49.11	2.96	540.20	540.32
N1	1728+59.11	2.96	540.02	540.17
O1	1728+69.11	2.96	539.83	540.01
P1	1728+79.11	2.96	539.65	539.82
Q1	1728+89.11	2.96	539.47	539.62
R1	1728+99.11	2.96	539.28	539.42
S1	1729+09.11	2.96	539.10	539.19
T1	1729+19.11	2.96	538.92	538.96
℄ Brg. E. Abut.	1729+25.11	2.96	538.81	538.83
Back E. Abut.	1729+26.96	2.96	538.77	538.79

GIRDER 5

Location	Station	Offset	Theoretical Grade Elevations	Theoretical Grade Elevations Adjusted For Dead Load Deflection and Grinding
Back W. Abut.	1724+47.99	8.88	547.47	547.49
℄ Brg. W. Abut.	1724+49.84	8.88	547.43	547.45
C	1724+59.84	8.88	547.25	547.29
D	1724+69.84	8.88	547.07	547.13
E	1724+79.84	8.88	546.88	546.95
F	1724+89.84	8.88	546.70	546.77
G	1724+99.84	8.88	546.52	546.58
H	1725+09.84	8.88	546.33	546.38
I	1725+19.84	8.88	546.15	546.19
J	1725+29.84	8.88	545.97	546.00
℄ Brg. Pier 1	1725+43.84	8.88	545.71	545.73
K	1725+53.84	8.88	545.53	545.56
L	1725+63.84	8.88	545.34	545.40
M	1725+73.84	8.88	545.16	545.24
N	1725+83.84	8.88	544.98	545.07
O	1725+93.84	8.88	544.79	544.90
P	1726+03.84	8.88	544.61	544.73
Q	1726+13.84	8.88	544.43	544.54
R	1726+23.84	8.88	544.24	544.34
S	1726+33.84	8.88	544.06	544.15
T	1726+43.84	8.88	543.87	543.95
U	1726+53.84	8.88	543.69	543.75
V	1726+63.84	8.88	543.51	543.54
℄ Brg. Pier 2	1726+73.84	8.88	543.32	543.34
W	1726+83.84	8.88	543.14	543.18
X	1726+93.84	8.88	542.96	543.01
Y	1727+03.84	8.88	542.77	542.84
Z	1727+13.84	8.88	542.59	542.67
A1	1727+23.84	8.88	542.41	542.50
B1	1727+33.84	8.88	542.22	542.33
C1	1727+43.84	8.88	542.04	542.16
D1	1727+53.84	8.88	541.86	541.96
E1	1727+63.84	8.88	541.67	541.76
F1	1727+73.84	8.88	541.49	541.56
G1	1727+83.84	8.88	541.31	541.36
H1	1727+93.84	8.88	541.12	541.17
I1	1728+03.84	8.88	540.94	540.97
℄ Brg. Pier 3	1728+09.84	8.88	540.83	540.85
J1	1728+19.84	8.88	540.65	540.69
K1	1728+29.84	8.88	540.46	540.53
L1	1728+39.84	8.88	540.28	540.38
M1	1728+49.84	8.88	540.10	540.22
N1	1728+59.84	8.88	539.91	540.07
O1	1728+69.84	8.88	539.73	539.90
P1	1728+79.84	8.88	539.55	539.71
Q1	1728+89.84	8.88	539.36	539.52
R1	1728+99.84	8.88	539.18	539.32
S1	1729+09.84	8.88	539.00	539.09
T1	1729+19.84	8.88	538.81	538.86
℄ Brg. E. Abut.	1729+25.84	8.88	538.70	538.72
Back E. Abut.	1729+27.69	8.88	538.67	538.69

GIRDER 6

Location	Station	Offset	Theoretical Grade Elevations	Theoretical Grade Elevations Adjusted For Dead Load Deflection and Grinding
Back W. Abut.	1724+48.72	14.79	547.35	547.37
℄ Brg. W. Abut.	1724+50.57	14.79	547.32	547.34
C	1724+60.57	14.79	547.13	547.17
D	1724+70.57	14.79	546.95	547.01
E	1724+80.57	14.79	546.77	546.83
F	1724+90.57	14.79	546.58	546.65
G	1725+00.57	14.79	546.40	546.46
H	1725+10.57	14.79	546.22	546.27
I	1725+20.57	14.79	546.03	546.07
J	1725+30.57	14.79	545.85	545.88
℄ Brg. Pier 1	1725+44.57	14.79	545.59	545.61
K	1725+54.57	14.79	545.41	545.45
L	1725+64.57	14.79	545.23	545.28
M	1725+74.57	14.79	545.04	545.12
N	1725+84.57	14.79	544.86	544.95
O	1725+94.57	14.79	544.68	544.78
P	1726+04.57	14.79	544.49	544.61
Q	1726+14.57	14.79	544.31	544.43
R	1726+24.57	14.79	544.13	544.23
S	1726+34.57	14.79	543.94	544.03
T	1726+44.57	14.79	543.76	543.83
U	1726+54.57	14.79	543.58	543.63
V	1726+64.57	14.79	543.39	543.43
℄ Brg. Pier 2	1726+74.57	14.79	543.21	543.23
W	1726+84.57	14.79	543.03	543.06
X	1726+94.57	14.79	542.84	542.89
Y	1727+04.57	14.79	542.66	542.73
Z	1727+14.57	14.79	542.48	542.56
A1	1727+24.57	14.79	542.29	542.39
B1	1727+34.57	14.79	542.11	542.22
C1	1727+44.57	14.79	541.92	542.04
D1	1727+54.57	14.79	541.74	541.84
E1	1727+64.57	14.79	541.56	541.64
F1	1727+74.57	14.79	541.37	541.44
G1	1727+84.57	14.79	541.19	541.25
H1	1727+94.57	14.79	541.01	541.05
I1	1728+04.57	14.79	540.82	540.85
℄ Brg. Pier 3	1728+10.57	14.79	540.71	540.73
J1	1728+20.57	14.79	540.53	540.58
K1	1728+30.57	14.79	540.35	540.42
L1	1728+40.57	14.79	540.16	540.26
M1	1728+50.57	14.79	539.98	540.10
N1	1728+60.57	14.79	539.80	539.95
O1	1728+70.57	14.79	539.61	539.79
P1	1728+80.57	14.79	539.43	539.60
Q1	1728+90.57	14.79	539.25	539.41
R1	1729+00.57	14.79	539.06	539.20
S1	1729+10.57	14.79	538.88	538.97
T1	1729+20.57	14.79	538.70	538.74
℄ Brg. E. Abut.	1729+26.57	14.79	538.59	538.61
Back E. Abut.	1729+28.41	14.79	538.55	538.57

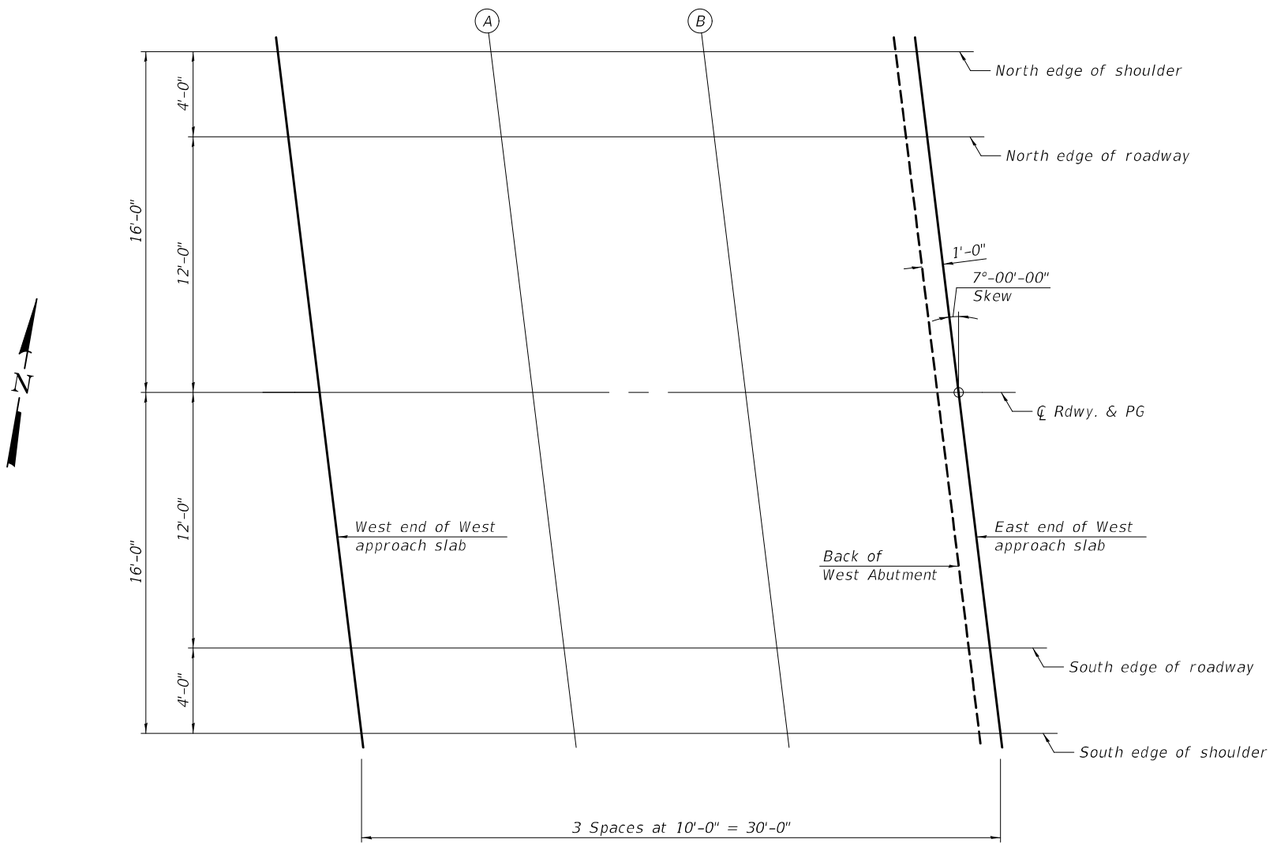

PLAN

NORTH EDGE OF SHOULDER

Location	Station	Offset	Theoretical Grade Elevations	Theoretical Grade Elevations Adjusted For Grinding
W. End of W. Appr. Slab	1724+15.95	-16.00	547.93	547.95
A	1724+25.95	-16.00	547.74	547.76
B	1724+35.95	-16.00	547.56	547.58
E. End of W. Appr. Slab	1724+45.95	-16.00	547.38	547.40

NORTH EDGE OF ROADWAY

Location	Station	Offset	Theoretical Grade Elevations	Theoretical Grade Elevations Adjusted For Grinding
W. End of W. Appr. Slab	1724+16.44	-12.00	548.00	548.02
A	1724+26.44	-12.00	547.82	547.84
B	1724+36.44	-12.00	547.63	547.65
E. End of W. Appr. Slab	1724+46.44	-12.00	547.45	547.47

℄ ROADWAY & PG

Location	Station	Offset	Theoretical Grade Elevations	Theoretical Grade Elevations Adjusted For Grinding
W. End of W. Appr. Slab	1724+17.91	0.00	548.15	548.17
A	1724+27.91	0.00	547.97	547.99
B	1724+37.91	0.00	547.78	547.80
E. End of W. Appr. Slab	1724+47.91	0.00	547.60	547.62

SOUTH EDGE OF ROADWAY

Location	Station	Offset	Theoretical Grade Elevations	Theoretical Grade Elevations Adjusted For Grinding
W. End of W. Appr. Slab	1724+19.38	12.00	547.94	547.96
A	1724+29.38	12.00	547.76	547.78
B	1724+39.38	12.00	547.58	547.60
E. End of W. Appr. Slab	1724+49.38	12.00	547.39	547.41

SOUTH EDGE OF SHOULDER

Location	Station	Offset	Theoretical Grade Elevations	Theoretical Grade Elevations Adjusted For Grinding
W. End of W. Appr. Slab	1724+19.87	16.00	547.86	547.88
A	1724+29.87	16.00	547.67	547.69
B	1724+39.87	16.00	547.49	547.51
E. End of W. Appr. Slab	1724+49.87	16.00	547.31	547.33

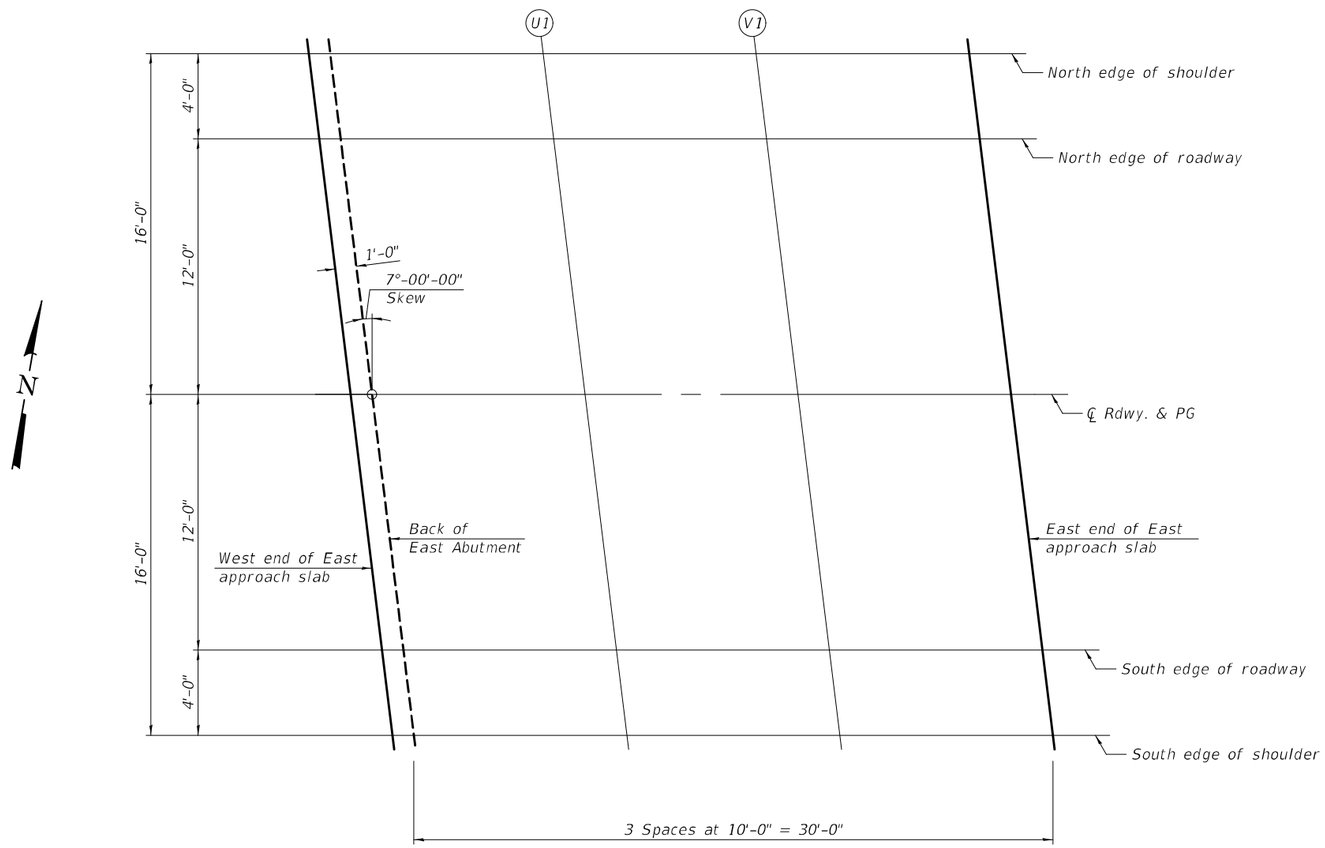

PLAN

NORTH EDGE OF SHOULDER

Location	Station	Offset	Theoretical Grade Elevations	Theoretical Grade Elevations Adjusted For Grinding
W. End of E. Appr. Slab	1729+23.63	-16.00	538.62	538.64
U1	1729+33.63	-16.00	538.43	538.45
V1	1729+43.63	-16.00	538.25	538.27
E. End of E. Appr. Slab	1729+53.63	-16.00	538.07	538.09

NORTH EDGE OF ROADWAY

Location	Station	Offset	Theoretical Grade Elevations	Theoretical Grade Elevations Adjusted For Grinding
W. End of E. Appr. Slab	1729+24.12	-12.00	538.69	538.71
U1	1729+34.12	-12.00	538.50	538.52
V1	1729+44.12	-12.00	538.32	538.34
E. End of E. Appr. Slab	1729+54.12	-12.00	538.14	538.16

℄ ROADWAY & PG

Location	Station	Offset	Theoretical Grade Elevations	Theoretical Grade Elevations Adjusted For Grinding
W. End of E. Appr. Slab	1729+25.59	0.00	538.84	538.86
U1	1729+35.59	0.00	538.66	538.68
V1	1729+45.59	0.00	538.47	538.49
E. End of E. Appr. Slab	1729+55.59	0.00	538.29	538.31

SOUTH EDGE OF ROADWAY

Location	Station	Offset	Theoretical Grade Elevations	Theoretical Grade Elevations Adjusted For Grinding
W. End of E. Appr. Slab	1729+27.06	12.00	538.63	538.65
U1	1729+37.06	12.00	538.45	538.47
V1	1729+47.06	12.00	538.27	538.29
E. End of E. Appr. Slab	1729+57.06	12.00	538.08	538.10

SOUTH EDGE OF SHOULDER

Location	Station	Offset	Theoretical Grade Elevations	Theoretical Grade Elevations Adjusted For Grinding
W. End of E. Appr. Slab	1729+27.55	16.00	538.54	538.56
U1	1729+37.55	16.00	538.36	538.38
V1	1729+47.55	16.00	538.18	538.20
E. End of E. Appr. Slab	1729+57.55	16.00	537.99	538.01

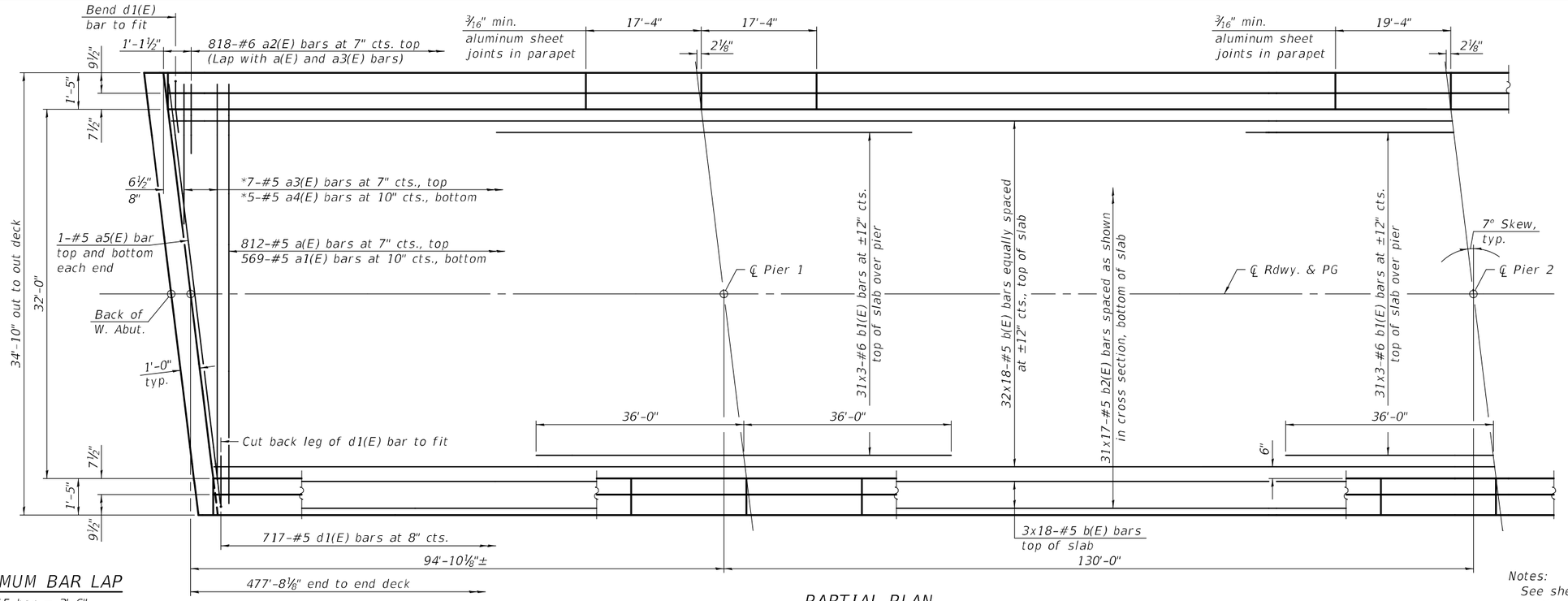

MINIMUM BAR LAP

#5 bar = 3'-6"
#6 bar = 3'-7"

PARTIAL PLAN

* See Field Cutting Diagram on sheet 12 of 41.

Notes:
See sheet 12 of 41 for superstructure details and Bill of Material.
Bars indicated thus 32 x 18-#5 etc. indicates 32 lines of bars with 18 lengths per line.

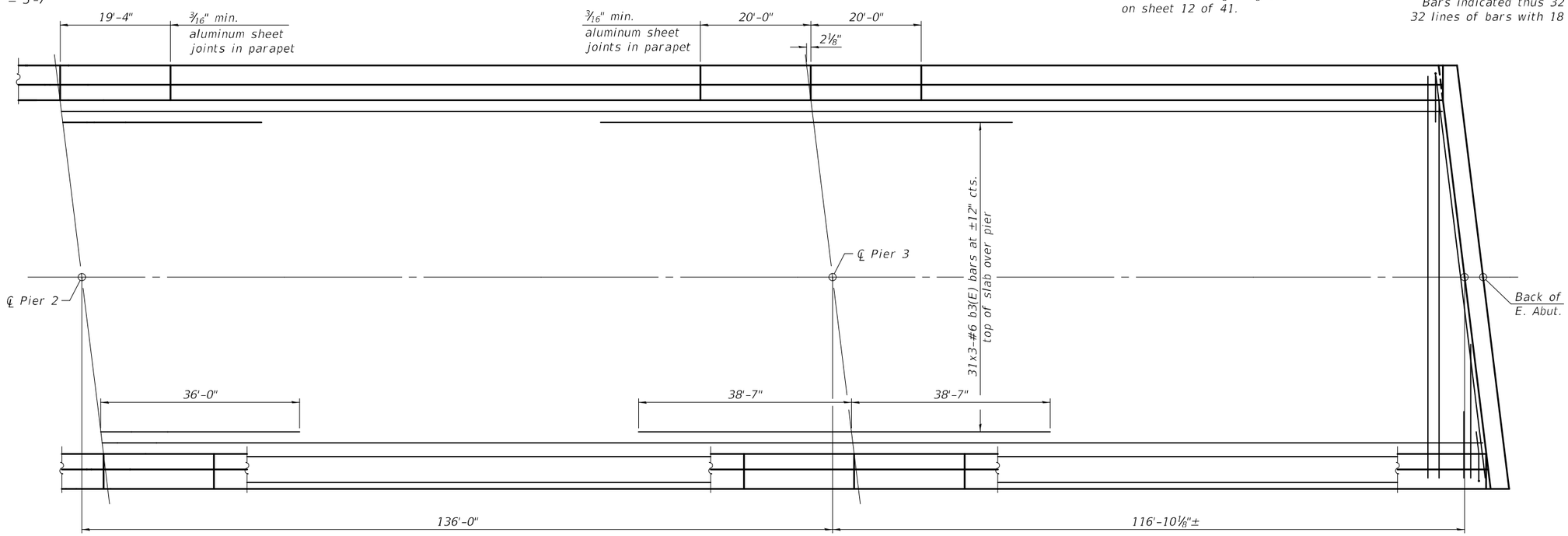

PARTIAL PLAN

DESIGNED - RYAN P. NEGANGARD	EXAMINED	DATE - 10/7/2025	STATE OF ILLINOIS DEPARTMENT OF TRANSPORTATION
CHECKED - DAVID H. RICHTER	ENGINEER OF BRIDGE DESIGN		
DRAWN - DENNIS A. POP	PASSED	REVISED -	
CHECKED - R.P.N. / D.H.R.	ENGINEER OF BRIDGES AND STRUCTURES	REVISED -	

SUPERSTRUCTURE
STRUCTURE NO. 018-0068

SHEET 10 OF 41 SHEETS

F.A.S. RTE.	SECTION	COUNTY	TOTAL SHEETS	SHEET NO.
1707	(FXX-B)B	CUMBERLAND	80	38
		CONTRACT NO. 74595		
	ILLINOIS	FED. AID PROJECT		

MODEL: 0180068-74595-010
FILE NAME: pw:\\ildot-pw.bentley.com:PWIDOT\Documents\IDOT Offices\Bureau of Bridges and Structures\Projects\0180068\CADD Plans\0180068-74595.dgn
10/8/2025 7:09:33 AM

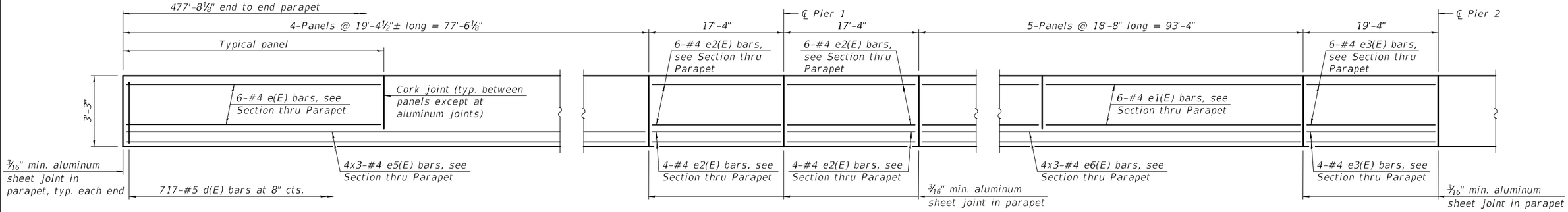

MINIMUM BAR LAP

#4 bar = 2'-5"

INSIDE ELEVATION OF PARAPET

3/16" Aluminum sheet joints in parapet

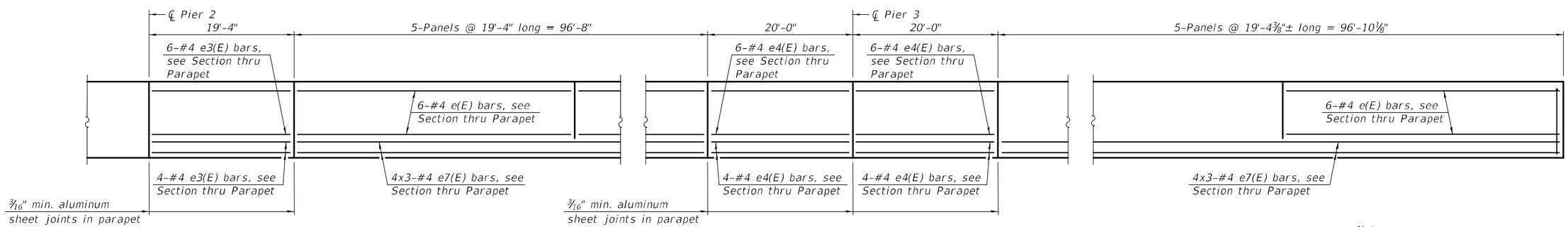

INSIDE ELEVATION OF PARAPET

Notes:
See sheet 12 of 41 for superstructure details and Bill of Material.
Bars indicated thus 4x3-#4 etc. indicates 4 lines of bars with 3 lengths per line.

* Prior to grinding

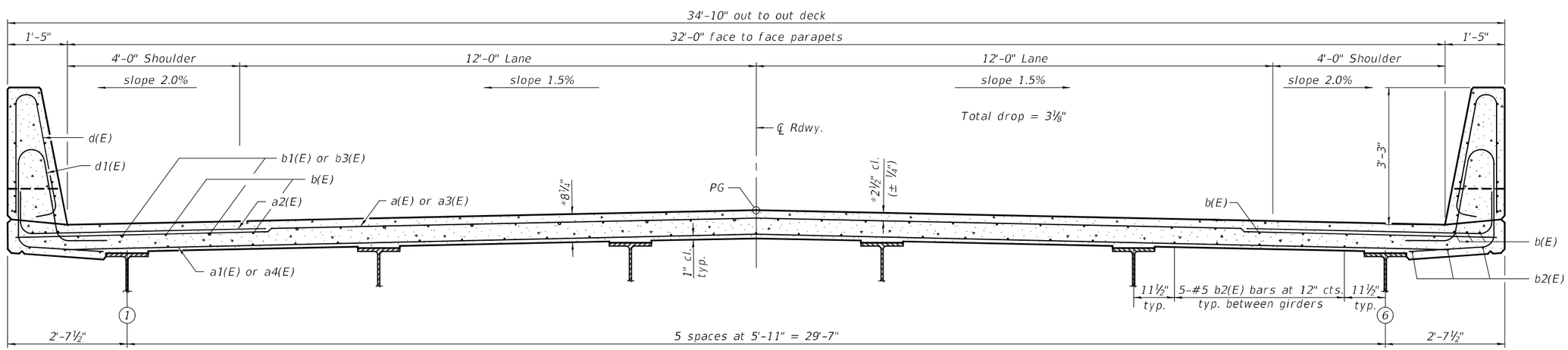

NEAR PIER

NEAR MIDSPAN

CROSS SECTION

(Looking East)

MODEL: 0180068-74595-011
FILE NAME: pw:\\ildot-pw.bentley.com:PWIDOT\Documents\IDOT Offices\Bureau of Bridges and Structures\Projects\0180068\CADD Plans\0180068-74595.dgn
10/8/2025 7:10:10 AM

DESIGNED -	RYAN P. NEGANGARD	EXAMINED	ENGINEER OF BRIDGE DESIGN
CHECKED -	DAVID H. RICHTER	PASSED	ENGINEER OF BRIDGES AND STRUCTURES
DRAWN -	DENNIS A. POP	DATE -	10/7/2025
CHECKED -	R.P.N. / D.H.R.	REVISED -	
		REVISED -	

STATE OF ILLINOIS
DEPARTMENT OF TRANSPORTATION

SUPERSTRUCTURE
STRUCTURE NO. 018-0068

SHEET 11 OF 41 SHEETS

F.A.S. RTE.	SECTION	COUNTY	TOTAL SHEETS	SHEET NO.
1707	(FXX-B)B	CUMBERLAND	80	39
		CONTRACT NO. 74595		
		ILLINOIS	FED. AID PROJECT	

Notes:
The 3/16" min. aluminum sheet shall be ASTM B 209 alloy 3003-H14 and coated to minimize reaction with wet concrete. Cost included with Concrete Superstructure.
The polyurethane sealant shall be according to Article 1050.04 of the Std. Spec. and the color shall be gray.
Bar terminators, paid for separately. See Total Bill of Material.

Notes:
The bridge deck shall be poured in the direction and numeric sequence shown for each stage of construction. If the Contractor wishes to alter the deck pouring sequence from the sequence shown, the Contractor shall submit a proposed deck pouring sequence to the Engineer for review and acceptance.
When the deck pour is stopped for the day at one or more of the transverse bonded construction joints in the deck pouring sequence as shown, the next pour shall not be made until both of the following are met:

1. At least 72 hours shall have elapsed from the end of the previous pour.
2. The concrete strength shall have attained a minimum flexural strength of 675 psi or a minimum compressive strength of 4000 psi.

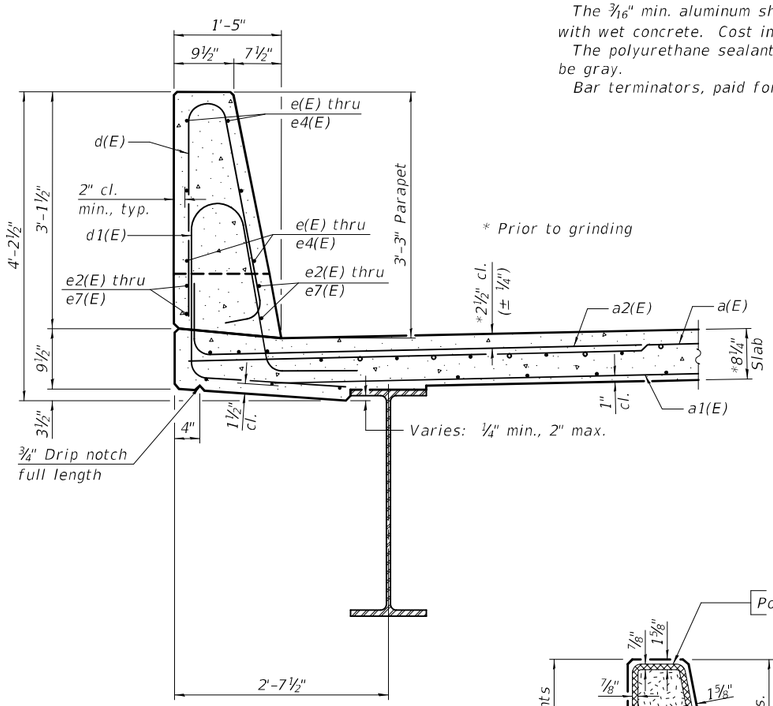

SECTION THRU PARAPET

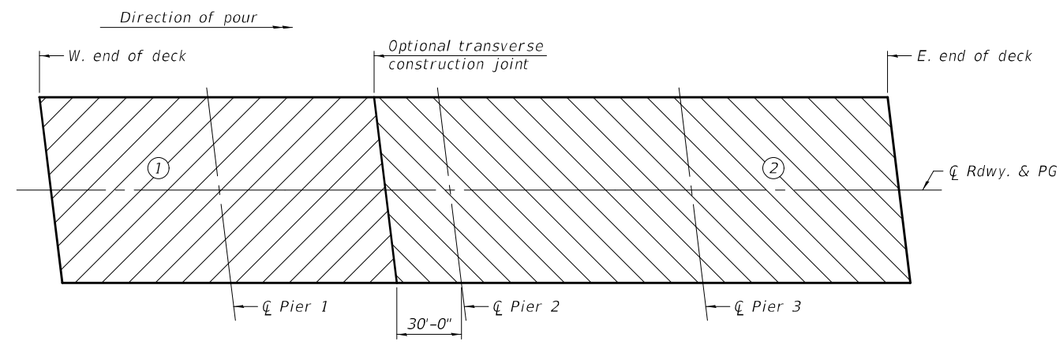

DECK POURING SEQUENCE

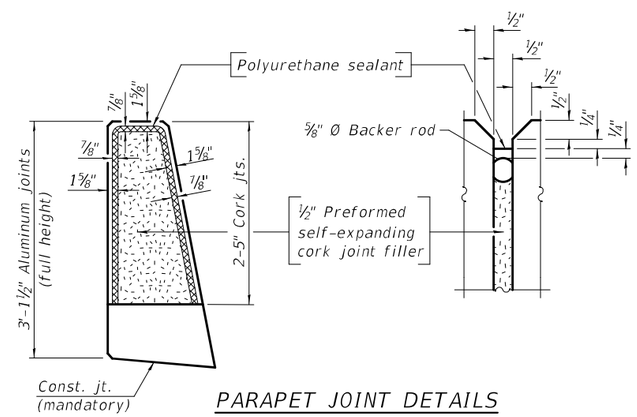

PARAPET JOINT DETAILS

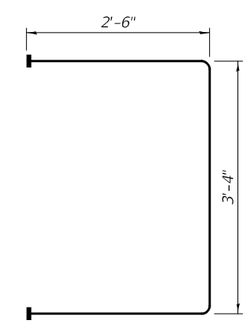

BAR s10(E)

(Headed. 124-#5 Bar terminators)

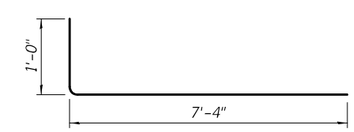

BAR a2(E)

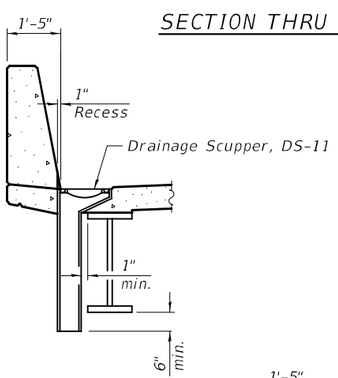

SECTION A-A

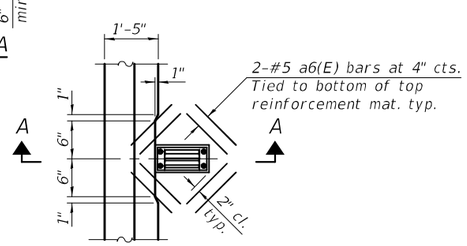

PLAN

Note:
Cut longitudinal reinforcement to clear drainage scuppers.

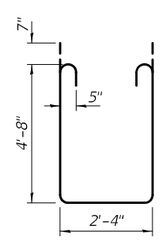

BAR s11(E)

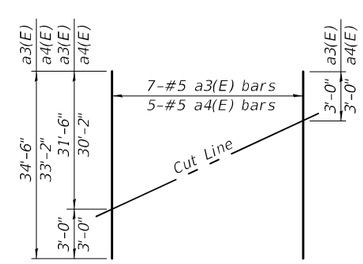

FIELD CUTTING DIAGRAM

Order a3(E) and a4(E) bars full length. Cut as shown and use remainder of bars in opposite end of deck.

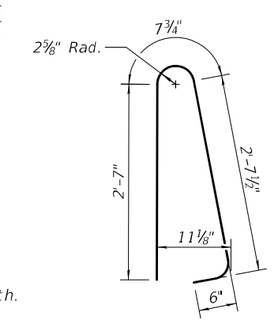

BAR d(E)

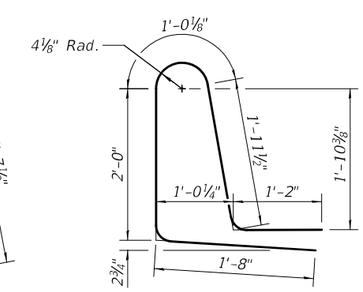

BAR d1(E)

SUPERSTRUCTURE BILL OF MATERIAL

Bar	No.	Size	Length	Shape
a(E)	812	#5	34'-6"	
a1(E)	569	#5	32'-10"	
a2(E)	1636	#6	8'-4"	
a3(E)	7	#5	34'-6"	
a4(E)	5	#5	33'-2"	
a5(E)	4	#5	34'-10"	
a6(E)	48	#5	1'-6"	
b(E)	684	#5	29'-10"	
b1(E)	186	#6	26'-5"	
b2(E)	527	#5	31'-5"	
b3(E)	93	#6	28'-2"	
d(E)	1434	#5	6'-5"	
d1(E)	1434	#5	7'-10"	
e(E)	168	#4	19'-1"	
e1(E)	60	#4	18'-4"	
e2(E)	40	#4	17'-0"	
e3(E)	40	#4	19'-0"	
e4(E)	40	#4	19'-8"	
e5(E)	24	#4	27'-4'	
e6(E)	24	#4	32'-8"	
e7(E)	48	#4	33'-10"	
m10(E)	12	#6	34'-10"	
m11(E)	50	#6	5'-8"	
m12(E)	20	#6	2'-4"	
s10(E)	62	#5	8'-4"	
s11(E)	62	#5	12'-10"	
Reinforcement Bars, Epoxy Coated			Pound	149,910
Concrete Superstructure			Cu. Yd.	614.9

DESIGNED - RYAN P. NEGANGARD	EXAMINED	DATE - 10/7/2025	STATE OF ILLINOIS DEPARTMENT OF TRANSPORTATION
CHECKED - DAVID H. RICHTER	ENGINEER OF BRIDGE DESIGN		
DRAWN - DENNIS A. POP	PASSED	REVISED -	
CHECKED - R.P.N. / D.H.R.	ENGINEER OF BRIDGES AND STRUCTURES	REVISED -	

SUPERSTRUCTURE DETAILS
STRUCTURE NO. 018-0068
SHEET 12 OF 41 SHEETS

F.A.S. RTE.	SECTION	COUNTY	TOTAL SHEETS	SHEET NO.
1707	(FXX-B)B	CUMBERLAND	80	40
		CONTRACT NO. 74595		
		ILLINOIS	FED. AID PROJECT	

MODEL: 0180068-74595-012
FILE NAME: pw:\\ildot-pw.bentley.com:PWIDOT\Documents\IDOT Offices\Bureau of Bridges and Structures\Projects\0180068\CADD Plans\0180068-74595.dgn
10/8/2025 7:10:49 AM

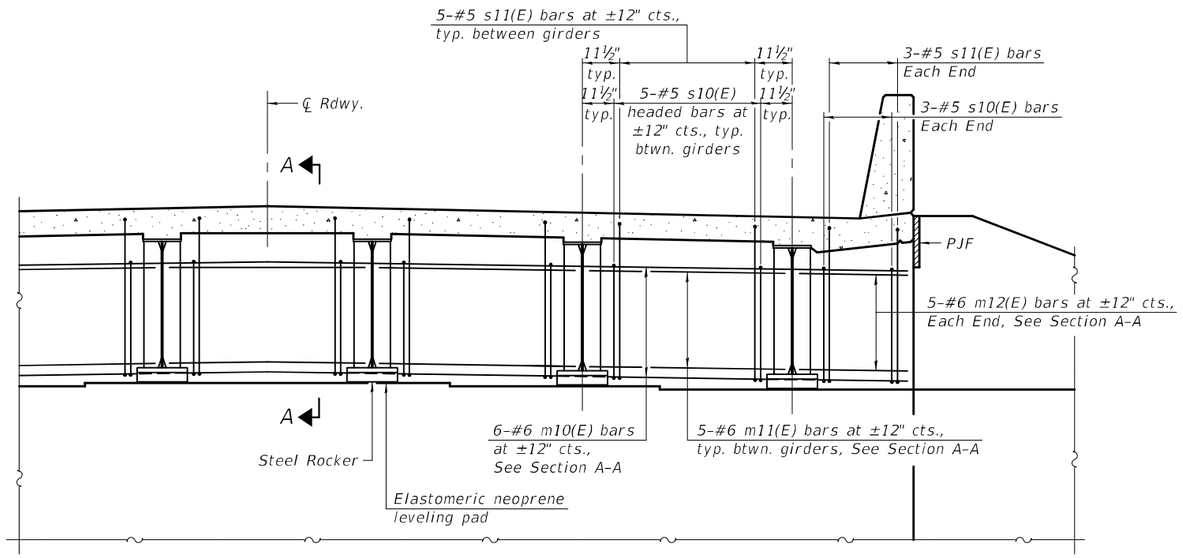

DIAPHRAGM AT ABUTMENT

(Looking at front face)

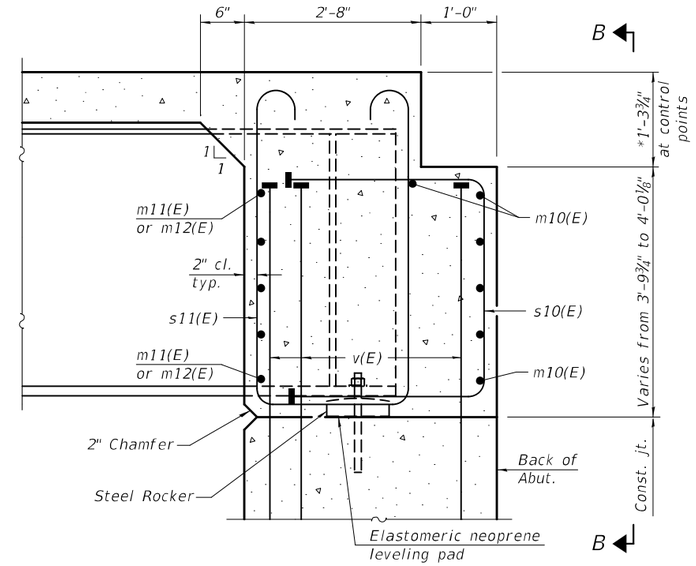

SECTION A-A

(@ Rt. L's)

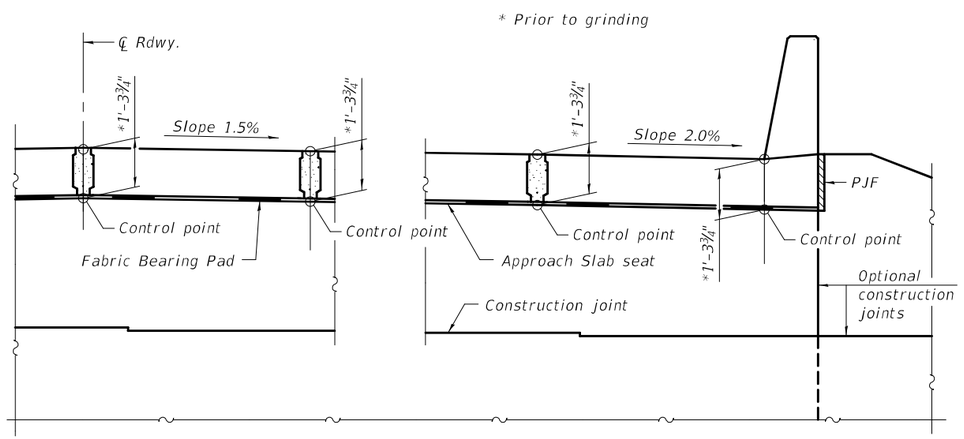

VIEW B-B

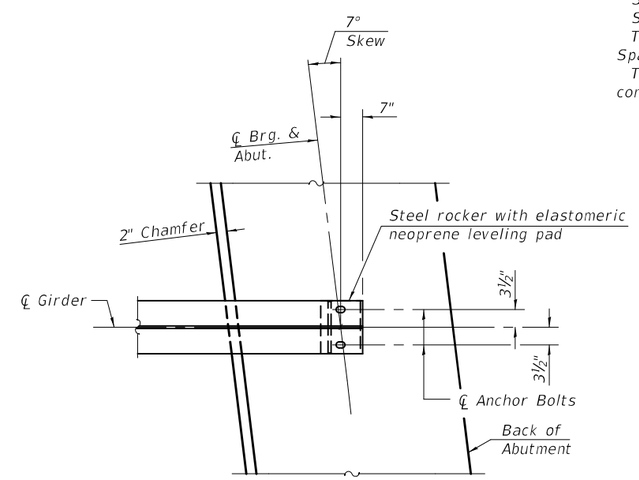

PLAN AT ABUTMENT

(Showing bottom flange of beam)

Notes:
See sheet 12 of 41 for superstructure details and Bill of Material.
See sheet 16 of 41 for PJF details.
The s10(E) and s11(E) bars shall be placed parallel to the beams. Spacing for these bars shall be at right angles to the beams.
The approach slab seat shall have slopes determined from the control points shown.

DESIGNED - RYAN P. NEGANGARD	EXAMINED	DATE - 10/7/2025	STATE OF ILLINOIS DEPARTMENT OF TRANSPORTATION
CHECKED - DAVID H. RICHTER	ENGINEER OF BRIDGE DESIGN		
DRAWN - DENNIS A. POP	PASSED	REVISED -	
CHECKED - R.P.N. / D.H.R.	ENGINEER OF BRIDGES AND STRUCTURES	REVISED -	

DIAPHRAGM DETAILS
STRUCTURE NO. 018-0068

SHEET 13 OF 41 SHEETS

F.A.S. RTE.	SECTION	COUNTY	TOTAL SHEETS	SHEET NO.
1707	(FXX-B)B	CUMBERLAND	80	41
		CONTRACT NO. 74595		
		ILLINOIS	FED. AID PROJECT	

MODEL: 0180068-74595-013
FILE NAME: pw:\\ildot-pw.bentley.com:PWIDOT\Documents\IDOT Offices\Bureau of Bridges and Structures\Projects\0180068\CADD Plans\0180068-74595.dgn
10/8/2025 7:11:31 AM

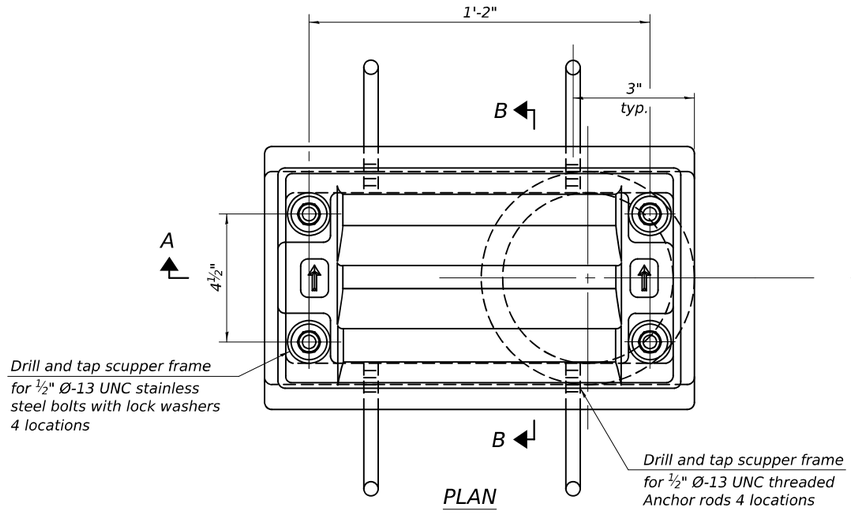

PLAN

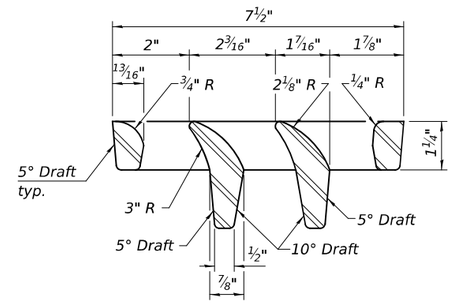

VANE GRATE DETAIL

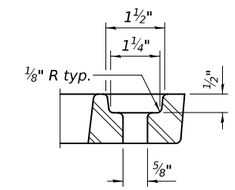

GRATE BOLT HOLE DETAIL

Notes:

All cast iron parts shall be gray iron conforming to the requirements of AASHTO M105, Class 35B and AASHTO M306.

Bolts, anchor rods, nuts and washers shall be according to ASTM A307 and shall be galvanized according to AASHTO M232. As an alternate stainless steel may be used.

Stainless steel hardware shall be according to Article 1006.29(d) of the Standard Specifications.

Structural steel weldments of equal sections and of the same configuration may be substituted for the cast iron scupper frames and downspouts; however, the scupper grates shall remain cast iron. Fillet or full penetration welds shall be used for the weldments. Details shall be submitted to the Engineer for approval.

Structural steel scupper frames and downspouts, when utilized, shall be galvanized according to AASHTO M111.

As an alternate, fiberglass may be used for downspouts according to ASTM D2996 with a short-time rupture strength hoop tensile stress of 30,000 psi min. in lieu of the cast iron or structural steel.

Exterior surfaces of downspouts and exterior exposed surfaces of the scupper frame below deck shall be pigmented or painted to match the color of the adjacent beam.

The Contractor shall take appropriate measures to assure that Protective Coat is not applied to the scupper.

Cost of the grate, frame, downspout, anchor rods, nuts and washers including complete installation of the scupper shall be paid for at the contract unit price for Drainage Scuppers, DS-11.

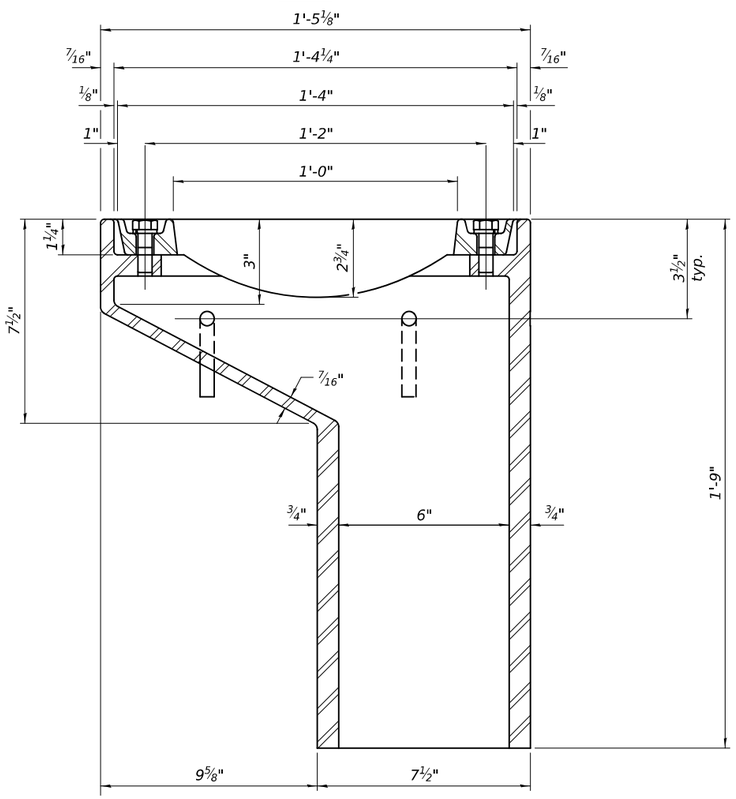

SECTION A-A

See sheet 12 of 41 for scupper location relative to parapet.

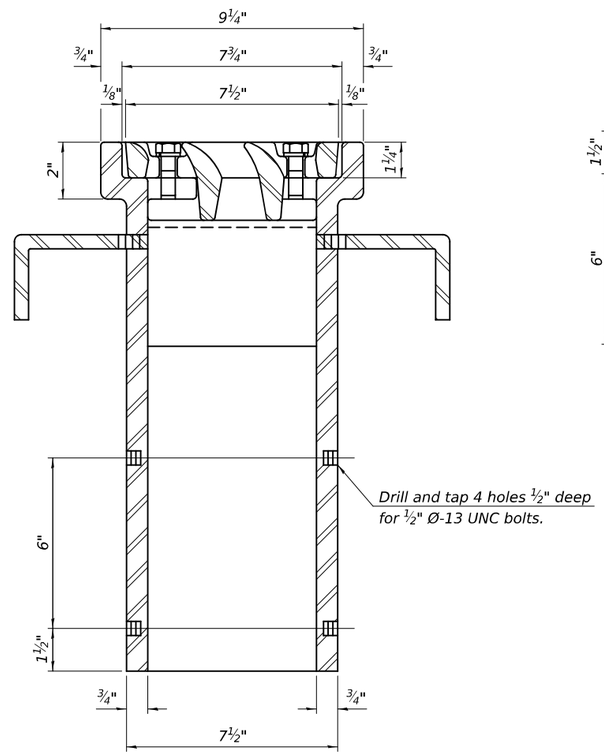

SECTION B-B

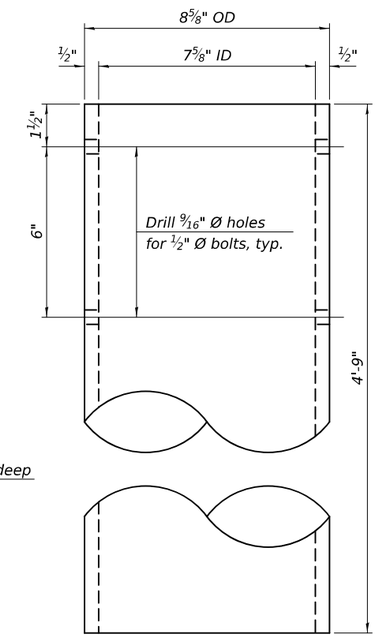

DOWNSPOUT

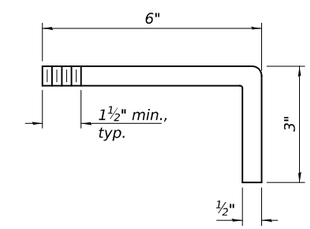

ANCHOR ROD DETAIL

BILL OF MATERIAL

Item	Unit	Quantity
Drainage Scuppers, DS-11	Each	6

DS-11 4-4-2025

DESIGNED - RYAN P. NEGANGARD	EXAMINED	DATE - 10/7/2025	STATE OF ILLINOIS DEPARTMENT OF TRANSPORTATION
CHECKED - DAVID H. RICHTER	ENGINEER OF BRIDGE DESIGN		
DRAWN - DENNIS A. POP	PASSED	REVISED -	
CHECKED - R.P.N. / D.H.R.	ENGINEER OF BRIDGES AND STRUCTURES	REVISED -	

BAR SPLICER ASSEMBLY AND MECHANICAL SPLICER DETAILS
STRUCTURE NO. 018-0068

SHEET 14 OF 41 SHEETS

F.A.S. RTE.	SECTION	COUNTY	TOTAL SHEETS	SHEET NO.
1707	(FXX-B)B	CUMBERLAND	80	42

CONTRACT NO. 74595

ILLINOIS FED. AID PROJECT

MODEL: 0180068-74595-014
FILE NAME: pw://ildot-pw.bentley.com:PWIDOT/Documents/IDOT O ces/Bureau of Bridges and Structures/OBM Projects/0180068/CADData/Bridge/0180068-74595.dgn
10/7/2025 2:41:47 PM

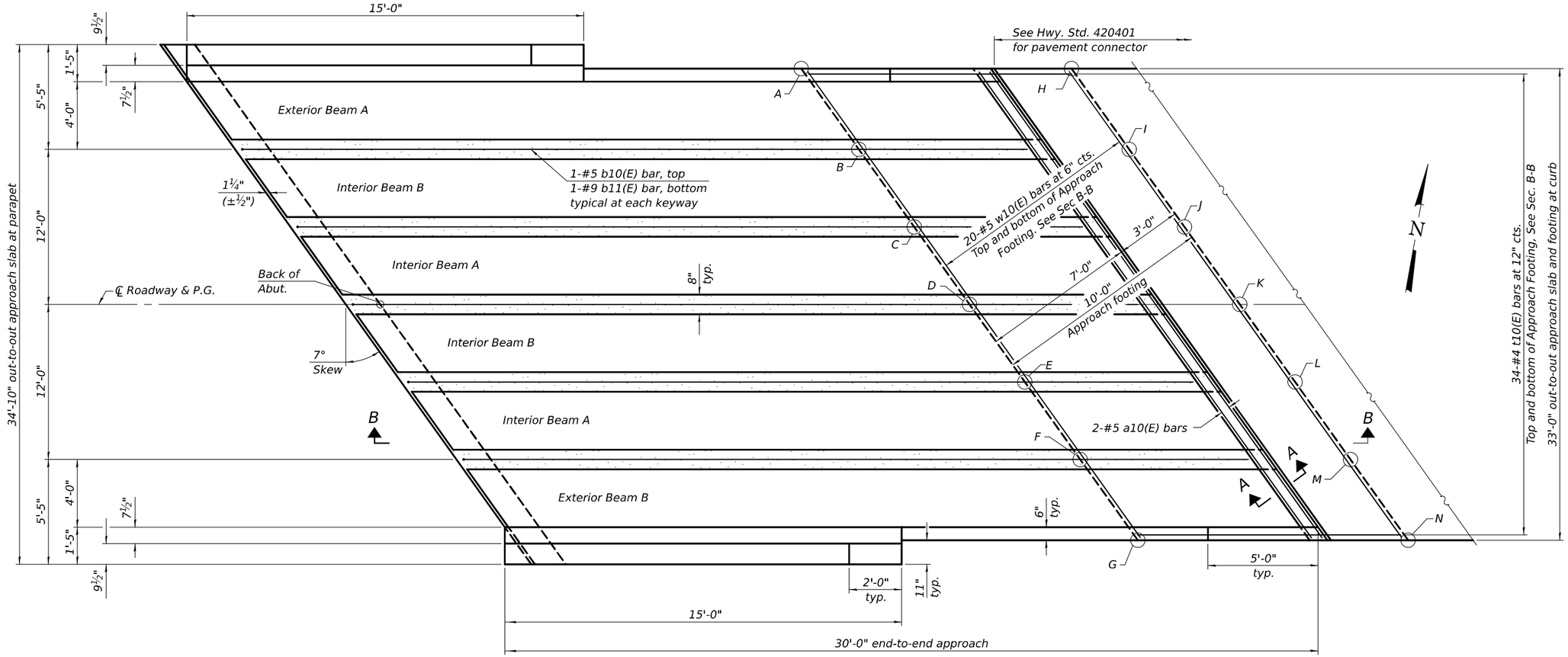

PLAN

(East approach slab shown; West approach slab similar by 180° rotation.
Two beam configurations (A and B) are shown. Alternate beam A and B for proper connection.)

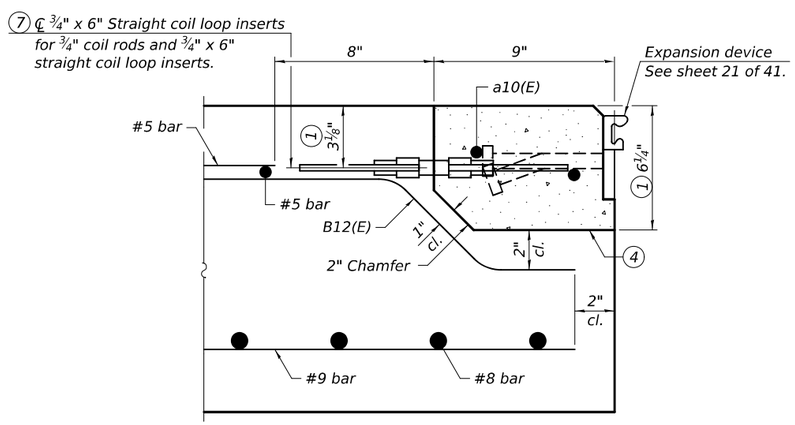

SECTION A-A

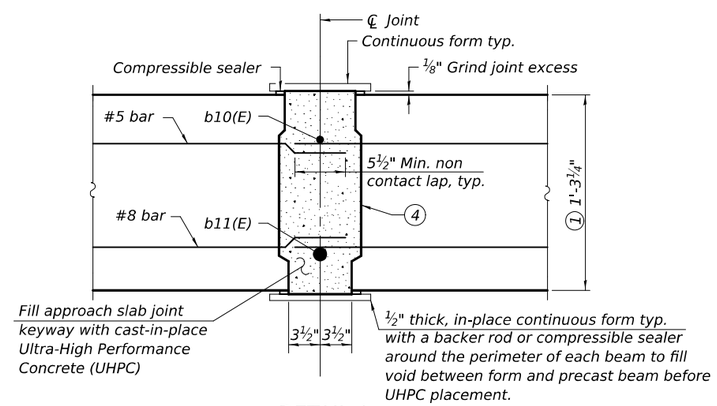

DETAIL A

(Transverse bars protruding into the shear keys along adjacent beams shall be staggered for proper fit-up in the field. Shear key cross sectional area = 0.95 sq. ft.)

ELEVATION OF TOP AND BOTTOM OF BRIDGE APPROACH FOOTING

West Approach			East Approach		
Point/ Location	Top	Bottom	Point/ Location	Top	Bottom
A - SE	546.43	545.60	A - NW	536.90	536.07
B	546.53	545.70	B	536.98	536.15
C	546.63	545.80	C	537.05	536.22
D - E ℄	546.73	545.90	D - W ℄	537.13	536.30
E	546.66	545.83	E	537.03	536.20
F	546.58	545.75	F	536.92	536.09
G - NE	546.50	545.67	G - SW	536.82	535.99
H - SW	546.61	545.78	H - NE	536.71	535.88
I	546.71	545.88	I	536.79	535.96
J	546.81	545.98	J	536.87	536.04
K - W ℄	546.92	546.09	K - E ℄	536.95	536.12
L	546.84	546.01	L	536.84	536.01
M	546.76	545.93	M	536.74	535.91
N - NW	546.68	545.85	N - SE	536.64	535.81

(Sheet 1 of 6)

MODEL: 0180068-74595-015
FILE NAME: pw://ildot-pw.bentley.com:PWIDOT/Documents/IDOT O ces/Bureau of Bridges and Structures/OBM Projects/0180068/CADData/Bridge/0180068-74595.dgn

DESIGNED -	RYAN P. NEGANGARD	EXAMINED	ENGINEER OF BRIDGE DESIGN
CHECKED -	DAVID H. RICHTER	PASSED	ENGINEER OF BRIDGES AND STRUCTURES
DRAWN -	DENNIS A. POP	DATE -	10/7/2025
CHECKED -	R.P.N. / D.H.R.	REVISED -	
		REVISED -	

10/7/2025 2:43:09 PM

STATE OF ILLINOIS
DEPARTMENT OF TRANSPORTATION

FULL DEPTH PRECAST BRIDGE APPROACH SLAB
STRUCTURE NO. 018-0068

SHEET 15 OF 41 SHEETS

F.A.S. RTE.	SECTION	COUNTY	TOTAL SHEETS	SHEET NO.
1707	(FXX-B)B	CUMBERLAND	80	43

CONTRACT NO. 74595

ILLINOIS | FED. AID PROJECT

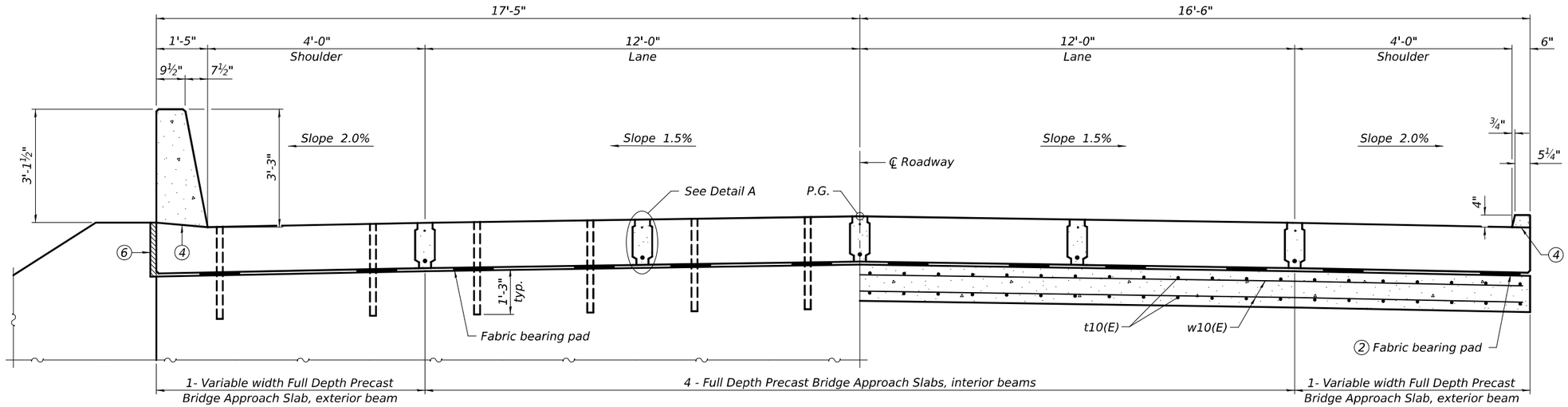

CROSS SECTION

(Looking East)

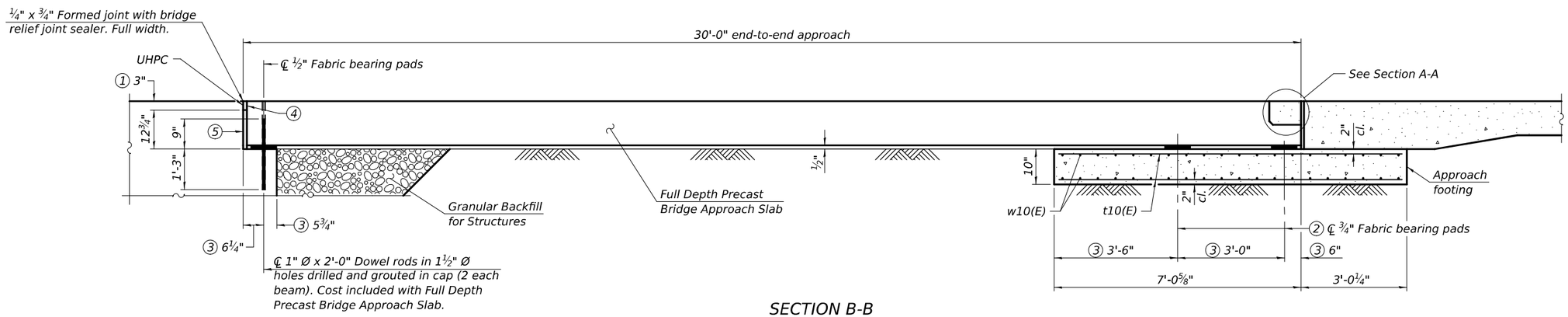

SECTION B-B

1. Prior to grinding
2. Fabric bearing pads at the expansion end shall be recessed ¼" into the approach footing and bonded. Adjusting shims, when required, shall be bonded to the top of the fabric bearing pads.
3. At right angles
4. Any precast surface to be bonded with UHPC or otherwise specified shall be prepared at the production facility by washing with water under pressure or by sandblasting to expose clean, well bonded aggregate to an amplitude of ¼ in. (6mm). To facilitate the removal of cement paste, the forms in contact with the surfaces shall be thoroughly covered with a surface retarder that delays the set of concrete surface, suitable for vertical surfaces, and approved by the Engineer.
5. 12¾" deep Cellular polystyrene according to ASTM C 578 (Types V, VII, or XV), full width of bridge. Provide slightly thicker piece than measured gap to tightly fill the area between abutment cap and end of beam. Thickness may vary between beams due to acceptable tolerances for precast products.
6. 2" PJF (per Article 1051.09 of the Standard Specifications) bonded to wingwall with suitable adhesive as recommended by supplier.
7. Straight coil loops shall be placed to miss the adjacent preformed joint strip seal studs.

DESIGNED - RYAN P. NEGANGARD	EXAMINED	DATE - 10/7/2025	STATE OF ILLINOIS DEPARTMENT OF TRANSPORTATION
CHECKED - DAVID H. RICHTER	ENGINEER OF BRIDGE DESIGN		
DRAWN - DENNIS A. POP	PASSED	REVISED -	
CHECKED - R.P.N. / D.H.R.	ENGINEER OF BRIDGES AND STRUCTURES	REVISED -	

FULL DEPTH PRECAST BRIDGE APPROACH SLAB
STRUCTURE NO. 018-0068

SHEET 16 OF 41 SHEETS

F.A.S. RTE.	SECTION	COUNTY	TOTAL SHEETS	SHEET NO.
1707	(FXX-B)B	CUMBERLAND	80	44
		CONTRACT NO. 74595		
		ILLINOIS	FED. AID PROJECT	

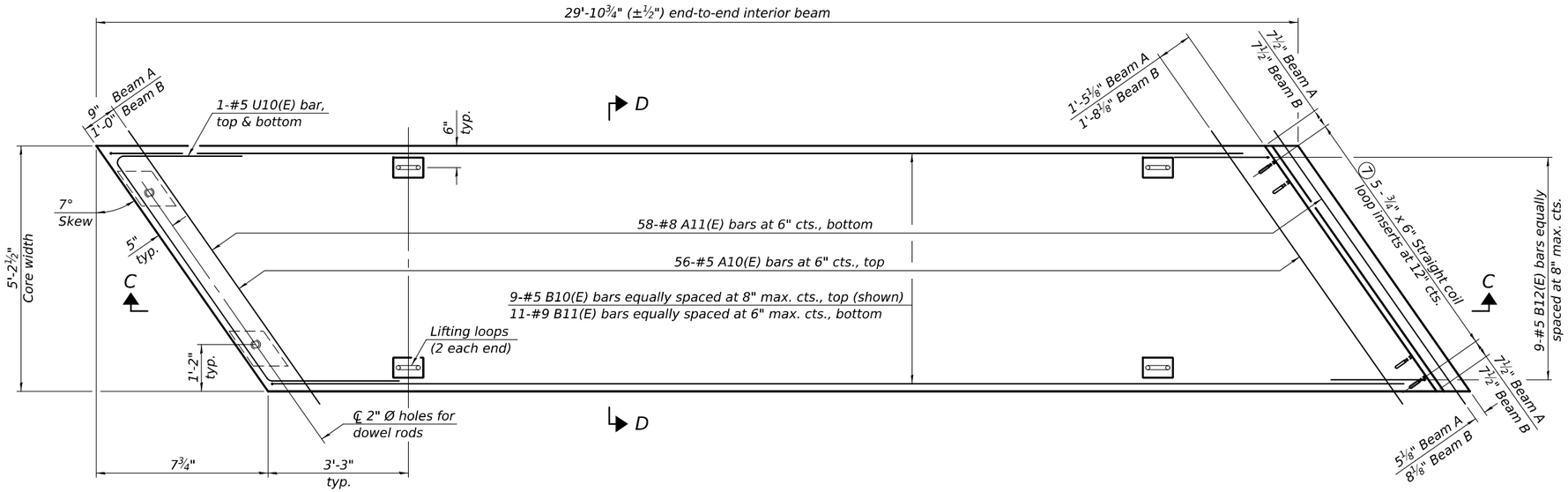

PLAN - INTERIOR BEAM

(Flanges not shown in plan view for clarity.)

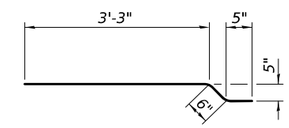

BAR B12(E)

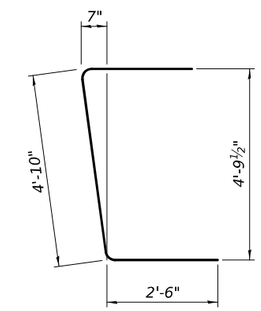

BAR U10(E)

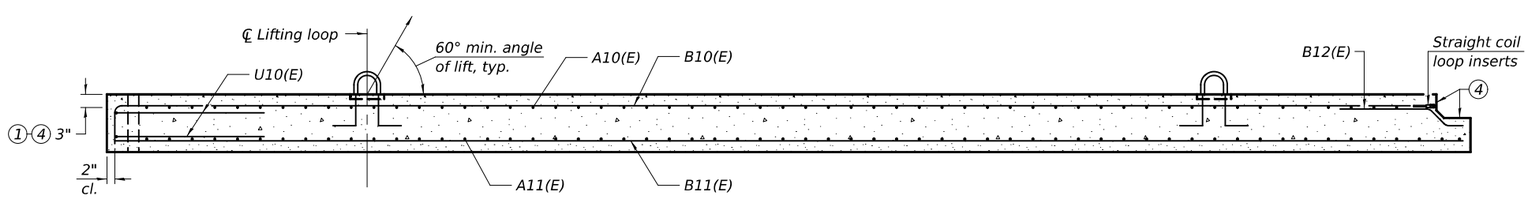

SECTION C-C

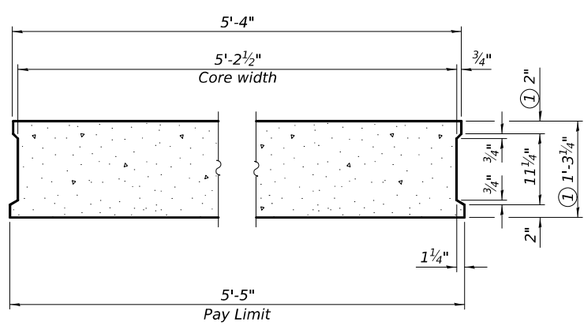

SECTION D-D

(Showing dimensions)

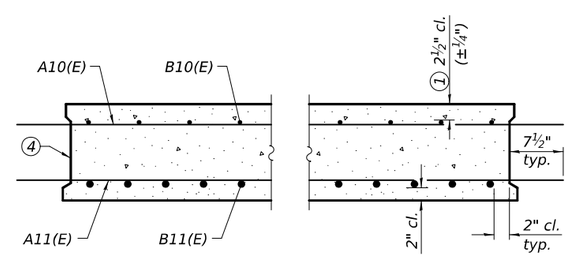

SECTION D-D

(Showing reinforcement)

BAR LIST

EACH INTERIOR BEAM

(For information only)

Bar	No.	Size	Length	Shape
A10(E)	56	#5	6'-6"	
A11(E)	58	#8	6'-6"	
B10(E)	9	#5	29'-2"	
B11(E)	11	#9	29'-7"	
B12(E)	9	#5	4'-2"	
U10(E)	2	#5	9'-10"	

Bar list includes the maximum number of bars for either beam. Any extra bar(s) shall not be used.

(Sheet 3 of 6)

DESIGNED - RYAN P. NEGANGARD	EXAMINED	DATE - 10/7/2025	STATE OF ILLINOIS DEPARTMENT OF TRANSPORTATION
CHECKED - DAVID H. RICHTER	ENGINEER OF BRIDGE DESIGN		
DRAWN - DENNIS A. POP	PASSED	REVISED -	
CHECKED - R.P.N. / D.H.R.	ENGINEER OF BRIDGES AND STRUCTURES	REVISED -	

FULL DEPTH PRECAST BRIDGE APPROACH SLAB
STRUCTURE NO. 018-0068

SHEET 17 OF 41 SHEETS

F.A.S. RTE.	SECTION	COUNTY	TOTAL SHEETS	SHEET NO.
1707	(FXX-B)B	CUMBERLAND	80	45

CONTRACT NO. 74595

ILLINOIS FED. AID PROJECT

MODEL: 0180068-74595-017
FILE NAME: pw://ildot-pw.bentley.com:PWIDOT/Documents/IDOT O ces/Bureau of Bridges and Structures/OBM Projects/0180068/CADData/Bridge/0180068-74595.dgn

10/7/2025 2:45:00 PM

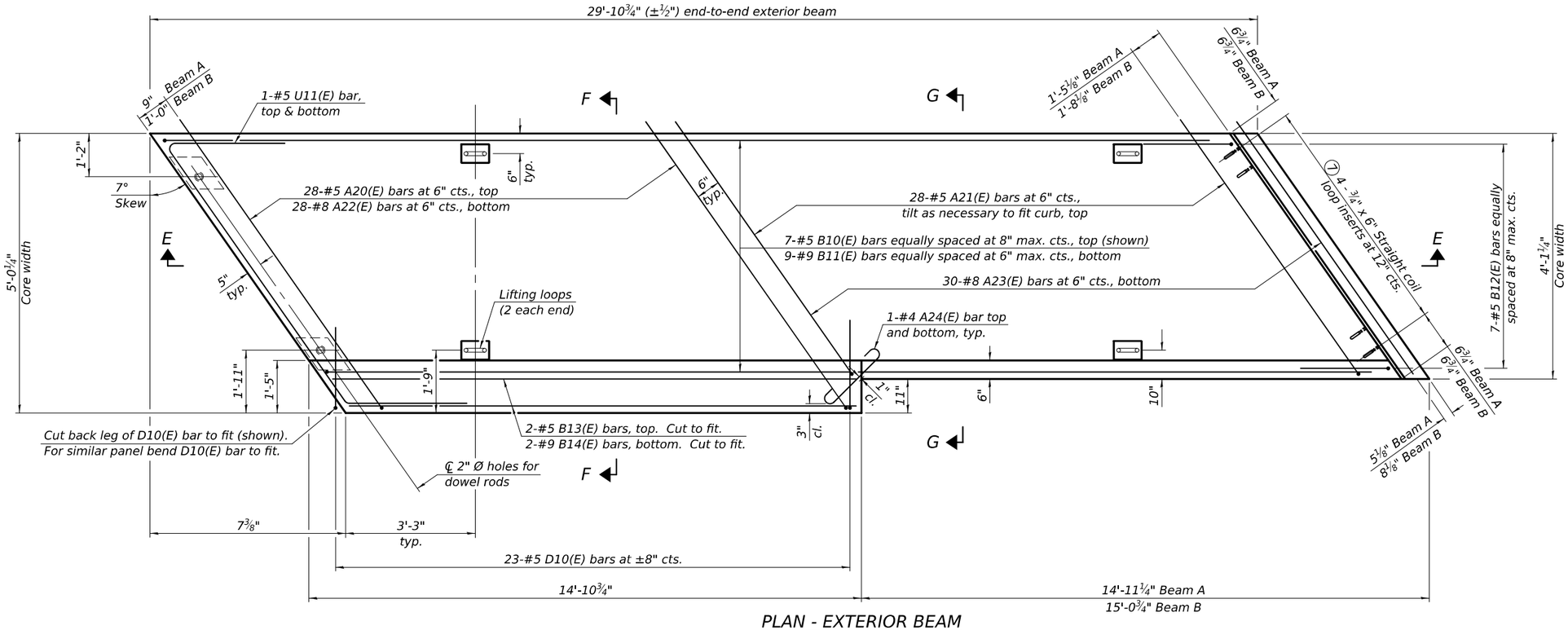

PLAN - EXTERIOR BEAM

(Beam B shown; Beam A similar
Flanges not shown in plan view for clarity.)

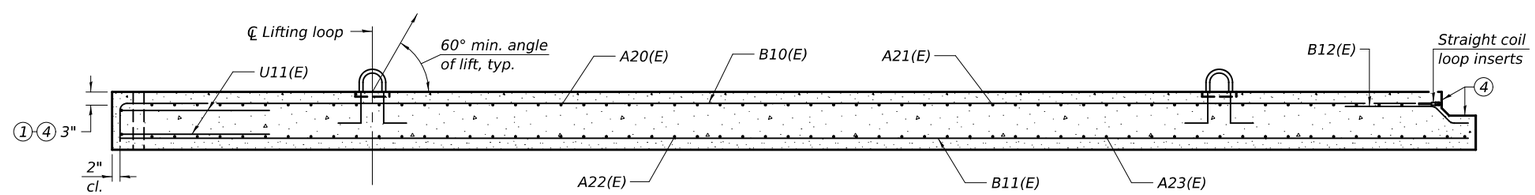

SECTION E-E

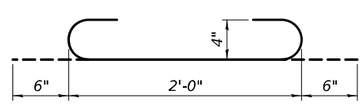

BAR A24(E)

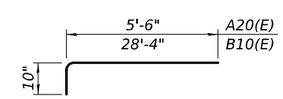

BARS A20(E) & B10(E)

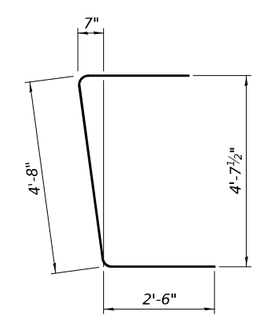

BAR U11(E)

(Sheet 4 of 6)

DESIGNED - RYAN P. NEGANGARD	EXAMINED	ENGINEER OF BRIDGE DESIGN	DATE - 10/7/2025	STATE OF ILLINOIS DEPARTMENT OF TRANSPORTATION	FULL DEPTH PRECAST BRIDGE APPROACH SLAB STRUCTURE NO. 018-0068
CHECKED - DAVID H. RICHTER					
DRAWN - DENNIS A. POP	PASSED	ENGINEER OF BRIDGES AND STRUCTURES	REVISED -		SHEET 18 OF 41 SHEETS
CHECKED - R.P.N. / D.H.R.			REVISED -		

F.A.S. RTE.	SECTION	COUNTY	TOTAL SHEETS	SHEET NO.
1707	(FXX-B)B	CUMBERLAND	80	46
		CONTRACT NO. 74595		
		ILLINOIS	FED. AID PROJECT	

MODEL: 0180068-74595-018
FILE NAME: pw://idot-pw.bentley.com:PWIDOT/Documents/DOT Offices/Bureau of Bridges and Structures/OBM Projects/0180068/CADData/Bridge/0180068-74595.dgn
10/7/2025 2:45:33 PM

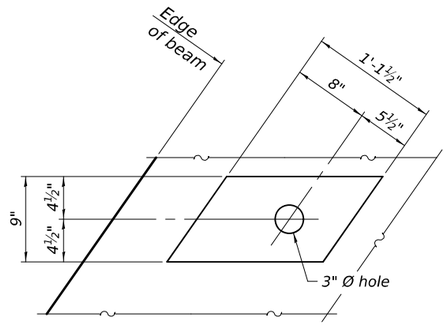

FABRIC BEARING PAD

(Bearing pads at fixed ends shall be ½" thick and bearing pads at expansion end shall be ¾" thick. Omit holes for fabric bearing pads at approach slab footing end of beams. Expansion fabric bearing pad shall be bonded to the approach slab footing.)

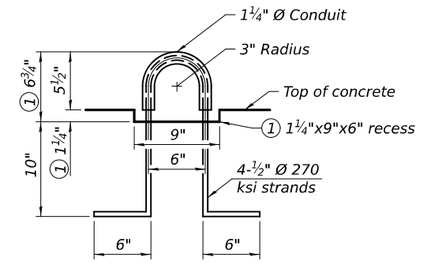

LIFTING LOOP DETAIL

(All lifting loops shall be recessed 1¼" minimum below the surface of the slab to allow for a minimum grout cover of 1" after maximum ¼" diamond grinding. Recess shall be filled with Ultra-High Performance Concrete (UHPC).)

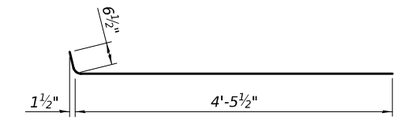

BAR A21(E)

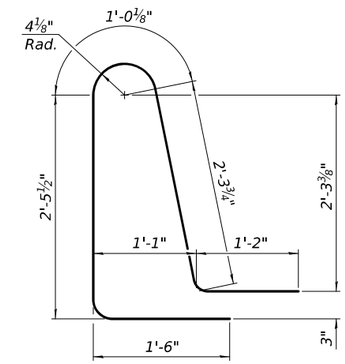

BAR D10(E)

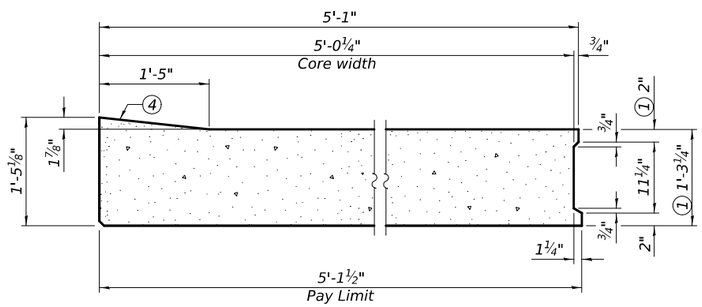

SECTION F-F

(Showing dimensions)

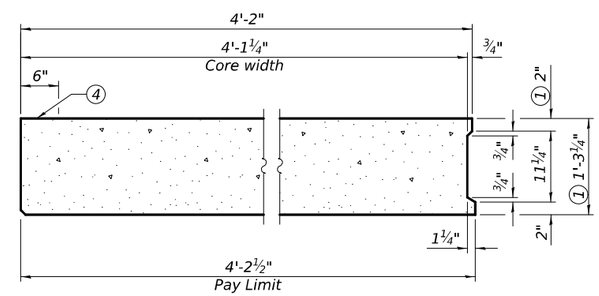

SECTION G-G

(Showing dimensions)

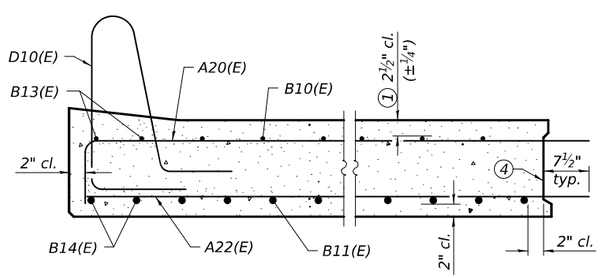

SECTION F-F

(Showing reinforcement)

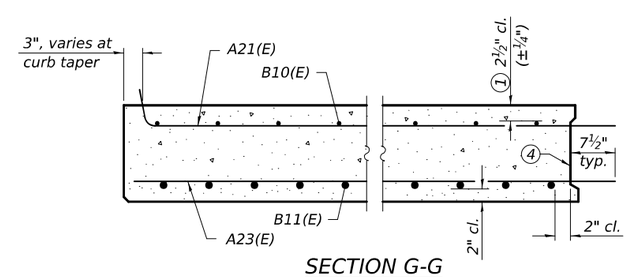

SECTION G-G

(Showing reinforcement)

BAR LIST
EACH EXTERIOR BEAM

(For information only)

Bar	No.	Size	Length	Shape
A20(E)	28	#5	6'-4"	
A21(E)	28	#5	5'-0"	
A22(E)	28	#8	5'-6"	
A23(E)	30	#8	4'-7"	
A24(E)	2	#4	3'-0"	
B10(E)	7	#5	29'-2"	
B11(E)	9	#9	29'-7"	
B12(E)	7	#5	4'-2"	
B13(E)	2	#5	14'-9"	
B14(E)	2	#9	14'-9"	
D10(E)	23	#5	8'-6"	
U11(E)	2	#5	9'-8"	

Bar list includes the maximum number of bars for either beam. Any extra bar(s) shall not be used.

(Sheet 5 of 6)

DESIGNED - RYAN P. NEGANGARD	EXAMINED	DATE - 10/7/2025	STATE OF ILLINOIS DEPARTMENT OF TRANSPORTATION
CHECKED - DAVID H. RICHTER	ENGINEER OF BRIDGE DESIGN		
DRAWN - DENNIS A. POP	PASSED	REVISED -	
CHECKED - R.P.N. / D.H.R.	ENGINEER OF BRIDGES AND STRUCTURES	REVISED -	

FULL DEPTH PRECAST BRIDGE APPROACH SLAB
STRUCTURE NO. 018-0068

SHEET 19 OF 41 SHEETS

F.A.S. RTE.	SECTION	COUNTY	TOTAL SHEETS	SHEET NO.
1707	(FXX-B)B	CUMBERLAND	80	47
		CONTRACT NO. 74595		
		ILLINOIS	FED. AID PROJECT	

MODEL: 0180068-74595-019
FILE NAME: pw://idot-pw.bentley.com:PWIDOT/Documents/IDOT O ces/Bureau of Bridges and Structures/OBM Projects/0180068/CADData/Bridge/0180068-74595.dgn
10/7/2025 2:46:07 PM

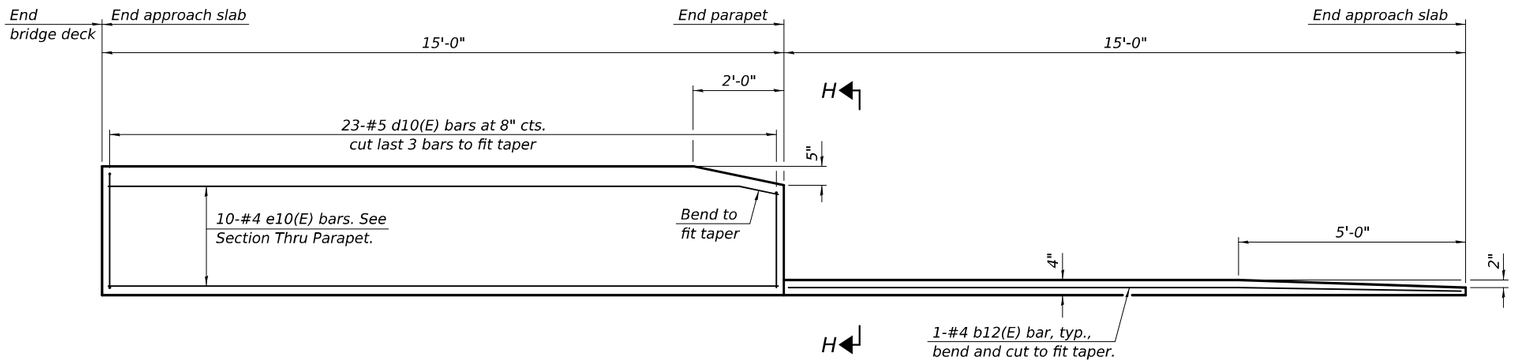

INSIDE ELEVATION OF PARAPET AND CURB

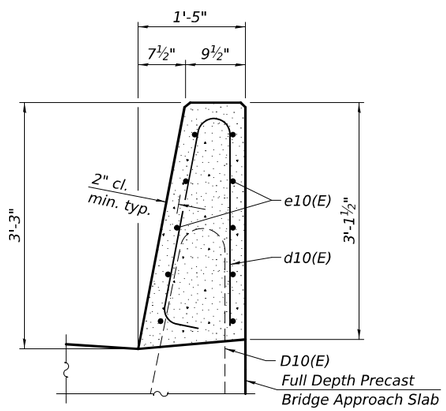

SECTION THRU PARAPET

(Bar D10(E) is cast in precast approach slab, bridge parapet shall be cast-in-place after UHPC has been adequately cured.)

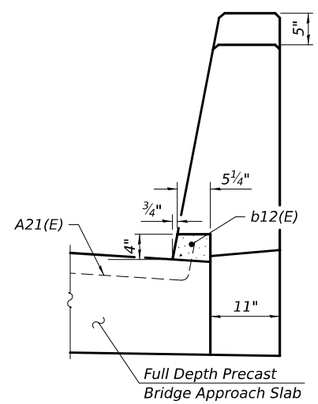

SECTION H-H

Notes:

The Full Depth Precast Bridge Approach Slab shall be according to Section 504 of the Standard Specifications and shall be paid for at the contract unit price per square foot for Full Depth Precast Bridge Approach Slab. Cost includes reinforcement bars (epoxy coated), fabric adjusting shims, bearing pads, dowel rods, cellular polystyrene, grout, straight single coil loop inserts, and Ultra-High Performance Concrete.

Cast-in-place substitution or Precast Bridge Approach Slab substitution for Full Depth Precast Bridge Approach Slab is not allowed.

The beams shall be cast with PC concrete according to Section 504, 1020 and 1042 of the Standard Specifications. Self-Consolidating Concrete (SCC) may be used for interior beams. SCC may be used for monolithic casting of the exterior beams, subject to the approval of the Bureau of Bridges and Structures. Shop drawings for exterior beams using SCC shall include lifting and handling procedures accompanied with calculations sealed by a Structural Engineer.

After Full Depth Precast Bridge Approach Slabs have been erected, holes shall be drilled into abutment and anchor dowels placed. Dowel holes shall be filled with non-shrink grout to top of precast slab and cured according to Article 1020.13(a)(3) or 1020.13(a)(5) of the Standard Specifications for a minimum of 24 hours before casting the longitudinal joints.

Corrosion Inhibitor, per Article 1020.05(b) (10) and 1021.07 of the Standard Specifications, shall be used in the concrete for Full Depth Precast Bridge Approach Slab beams.

Two ⅛" fabric adjusting shims of the dimensions of the bearing pad shall be provided for each bearing pad location.

A minimum of two ½" Ø lifting pins shall be used to engage the lifting loops during handling.

The joint opening shall be adjusted for temperature per Article 520.04 of the Standard Specifications. However, since this detail is for jointless structures, the length of the bridge used to calculate the adjustment shall be equal to half the total bridge length plus the length of the bridge approach slab.

Compressive strength of precast concrete, f 'c, shall be 5000 psi.

Compressive strength of precast concrete before lifting, f 'ci, shall be 4000 psi.

Minimum compressive strength of Ultra-High Performance Concrete, f 'c, shall be 14000 psi.

The bridge approach footing maximum applied service bearing pressure Qmax = 2.0 ksf.

For Granular Backfill for Structures and drainage treatment details, see sheet 2 of 41.

Parapet, curb, and expansion joint blockout concrete shall be cast-in-place and be paid for as Concrete Superstructures.

Approach footing concrete shall be paid for as Concrete Structures.

Cost of excavation for approach footing included with Concrete Structures.

The strip seal shall extend 6" beyond the edge of the approach slab on each end.

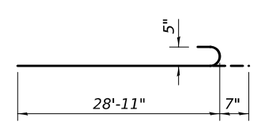

BAR b10(E)

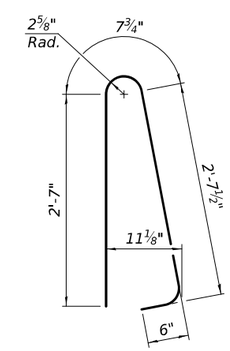

BAR d10(E)

TWO APPROACHES
BILL OF MATERIALS

Bar	No.	Size	Length	Shape
a10(E)	4	#5	32'-11"	
b10(E)	10	#5	29'-6"	
b11(E)	10	#9	29'-8"	
b12(E)	4	#4	14'-9"	
d10(E)	92	#5	6'-5"	
e10(E)	40	#4	14'-8"	
t10(E)	136	#4	9'-9"	
w10(E)	80	#5	32'-11"	
Concrete Structures			Cu. Yd.	20.5
Concrete Superstructure			Cu. Yd.	9.1
Reinforcement Bars, Epoxy Coated			Pound	6130
Full Depth Precast Bridge Approach Slab			Sq. Ft.	1853

(Sheet 6 of 6)

MODEL: 0180068-74595-020
FILE NAME: pw://ildot-pw.bentley.com:PWIDOT/Documents/IDOT O ces/Bureau of Bridges and Structures/OBM Projects/0180068/CADData/Bridge/0180068-74595.dgn
10/7/2025 2:46:41 PM

DESIGNED - RYAN P. NEGANGARD	EXAMINED	DATE - 10/7/2025	STATE OF ILLINOIS DEPARTMENT OF TRANSPORTATION
CHECKED - DAVID H. RICHTER	ENGINEER OF BRIDGE DESIGN		
DRAWN - DENNIS A. POP	PASSED	REVISED -	
CHECKED - R.P.N. / D.H.R.	ENGINEER OF BRIDGES AND STRUCTURES	REVISED -	

FULL DEPTH PRECAST BRIDGE APPROACH SLAB
STRUCTURE NO. 018-0068

SHEET 20 OF 41 SHEETS

F.A.S. RTE.	SECTION	COUNTY	TOTAL SHEETS	SHEET NO.
1707	(FXX-B)B	CUMBERLAND	80	48

CONTRACT NO. 74595

ILLINOIS FED. AID PROJECT

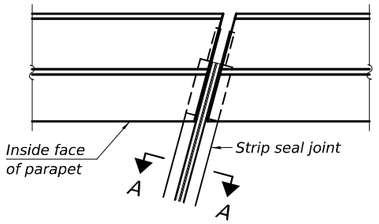

FOR SKEWS ≤ 30°

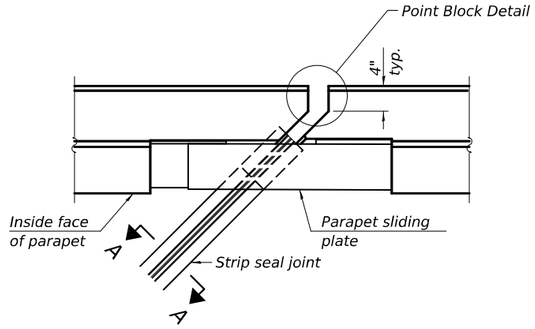

FOR SKEWS > 30°

PLAN AT PARAPET

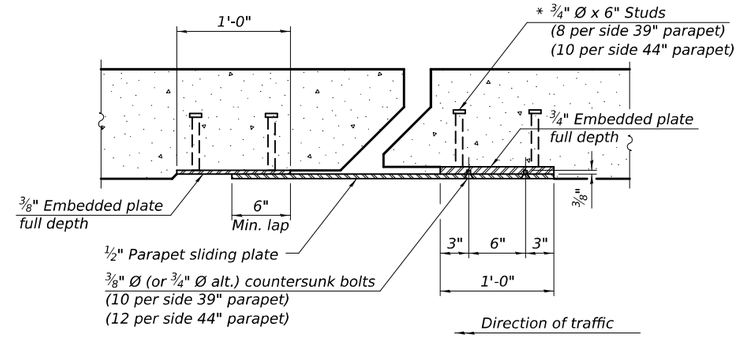

SECTION B-B

(¾" Ø countersunk bolts extending into concrete shall have hex nuts tack welded to the back of the embedded plates with end caps provided.)

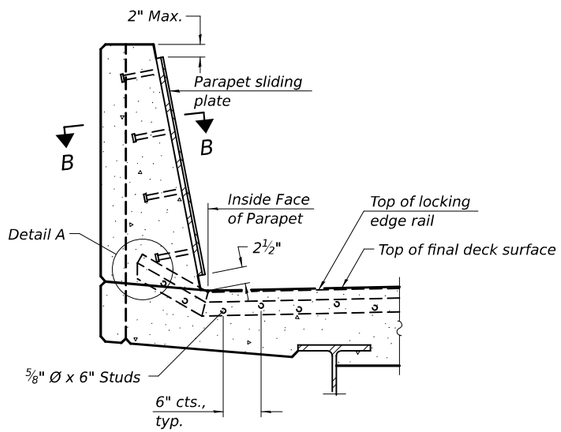

SECTION AT PARAPET

(Skews > 30° shown. Skews ≤ 30° similar except as shown in plan view.)

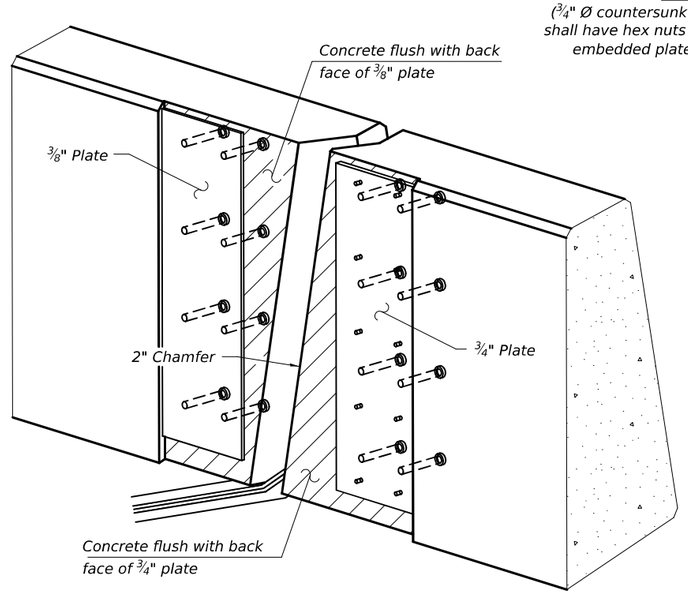

TRIMETRIC VIEW

(Showing embedded plates only)

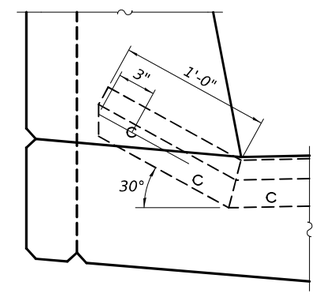

DETAIL A

(Kick-up at parapet locations shown. See sheet of for kick-up at curb locations.)

Notes:

The strip seal shall be made continuous and shall have a minimum thickness of ¼". The configuration of the strip seal shall match the configuration of the locking edge rails. Open or "webbed" strip seal gland configurations are not permitted. The gland shall be sized for a maximum rated movement of 4 inches.

The locking edge rails depicted are configured for typical applications and are conceptual only. The actual configuration of the locking edge rails and matching strip seal may vary from manufacturer to manufacturer provided they fit the application and meet the minimum anchorage shown. Flanged edge rails, however, will not be allowed. Locking edge rails may exceed the 4½" maximum depth provided the anchorage system is revised according to the manufacturer's recommendation.

The manufacturer's recommended installation methods shall be followed.

All steel components shall be galvanized after fabrication according to Article 520.03 of the Standard Specifications.

The Maximum space between locking edge rail segments shall be 3/16" and sealed with a suitable sealant; however, any rail joint within 10' measured perpendicular to the face of the curb or parapet shall be welded as shown in the locking edge rail splice detail.

Cost of parapet sliding plates, embedded plates, and anchorage studs included with Preformed Joint Strip Seal.

39" constant slope barrier shown, 44" constant slope barrier similar as noted.

The concrete opening below the strip seal will vary based on the locking edge rail chosen by the Contractor. Deck and parapet lengths shown elsewhere in the plans are dimensioned to the concrete opening, not the joint opening, and are based on the rolled locking edge rail. If the Contractor elects to use a different locking edge rail, dimensional adjustments may be required. One exception to this would be the strip seal joint at the end of the precast bridge approach slab. For these cases the pavement connector length shall be adjusted, not the length of the bridge approach slab.

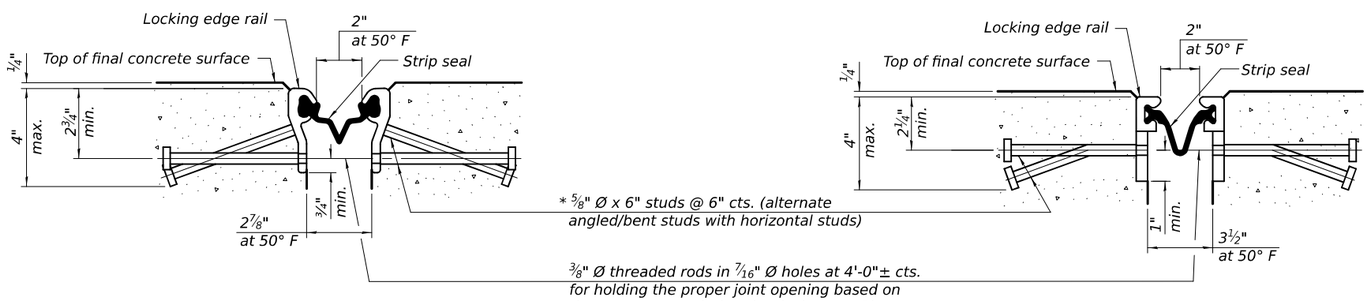

SHOWING ROLLED RAIL JOINT

SHOWING WELDED RAIL JOINT

SECTION A-A

* Granular or solid flux filled headed studs conforming to Article 1006.32 of the Std. Specs., automatically end welded.

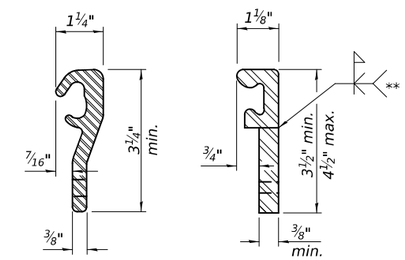

ROLLED (EXTRUDED) RAIL

WELDED RAIL

LOCKING EDGE RAILS

** Back gouge not required if complete joint penetration is verified by mock-up.

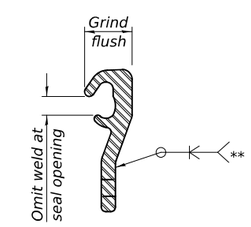

LOCKING EDGE RAIL SPLICE

The inside of the locking edge rail groove shall be free of weld residue. Rolled rail shown, welded rail similar.

BILL OF MATERIAL

Item	Unit	Total
Preformed Joint Strip Seal	Foot	68

EJ-SS 4-4-2025

DESIGNED - RYAN P. NEGANGARD	EXAMINED	DATE - 10/7/2025	STATE OF ILLINOIS DEPARTMENT OF TRANSPORTATION
CHECKED - DAVID H. RICHTER	ENGINEER OF BRIDGE DESIGN		
DRAWN - DENNIS A. POP	PASSED	REVISED -	
CHECKED - R.P.N. / D.H.R.	ENGINEER OF BRIDGES AND STRUCTURES	REVISED -	

PREFORMED JOINT STRIP SEAL
STRUCTURE NO. 018-0068

SHEET 21 OF 41 SHEETS

F.A.S. RTE.	SECTION	COUNTY	TOTAL SHEETS	SHEET NO.
1707	(FXX-B)B	CUMBERLAND	80	49

CONTRACT NO. 74595

ILLINOIS FED. AID PROJECT

MODEL: 0180068-74595-021
FILE NAME: pw://ildot-pw.bentley.com:PWIDOT/Documents/IDOT O ces/Bureau of Bridges and Structures/OBM Projects/0180068/CADData/Bridge/0180068-74595.dgn

10/7/2025 2:47:23 PM

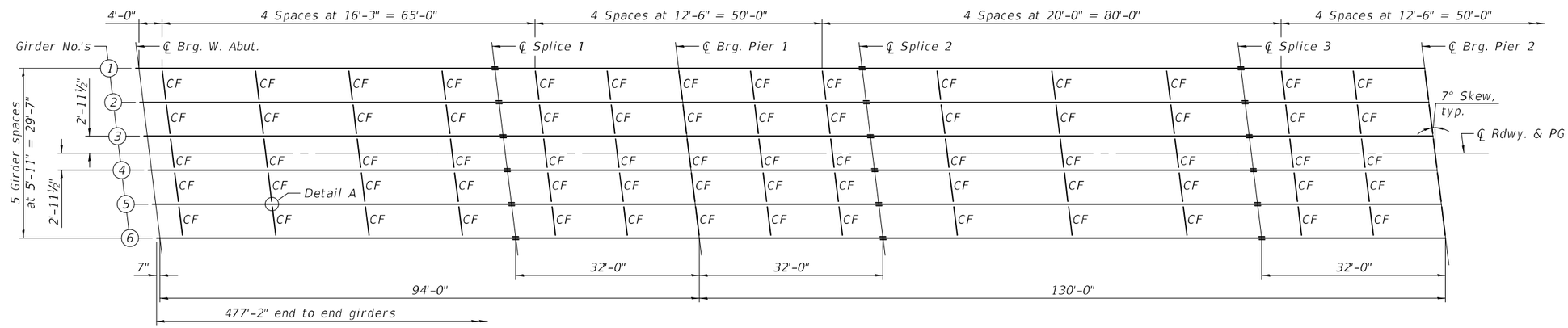

PLAN

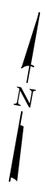

Note:
See sheet 24 of 41 for additional notes and details.

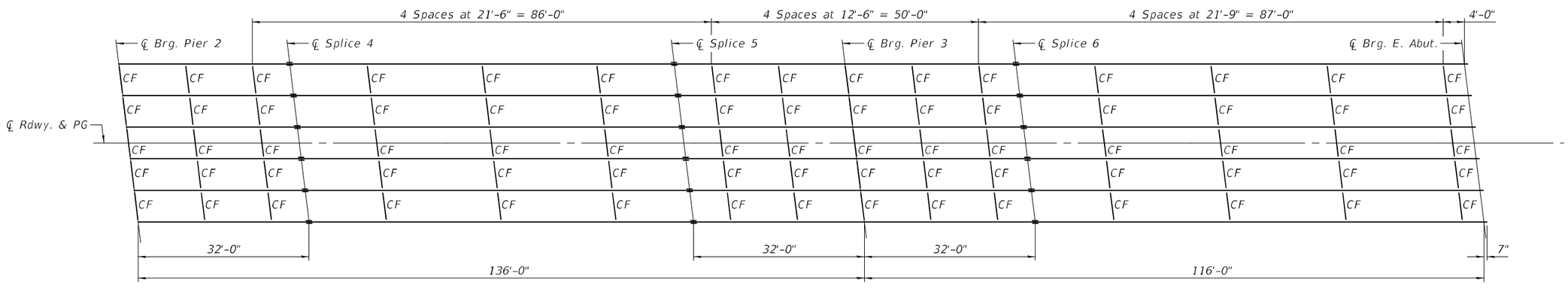

PLAN

MODEL: 0180068-74595-022
FILE NAME: pw:\\ildot-pw.bentley.com:PWIDOT\Documents\IDOT Offices\Bureau of Bridges and Structures\Projects\0180068\CADD Plans\0180068-74595.dgn
10/8/2025 7:12:27 AM

DESIGNED - RYAN P. NEGANGARD	EXAMINED	DATE - 10/7/2025	STATE OF ILLINOIS DEPARTMENT OF TRANSPORTATION
CHECKED - DAVID H. RICHTER	ENGINEER OF BRIDGE DESIGN		
DRAWN - DENNIS A. POP	PASSED	REVISED -	
CHECKED - R.P.N. / D.H.R.	ENGINEER OF BRIDGES AND STRUCTURES	REVISED -	

STRUCTURAL STEEL DETAILS
STRUCTURE NO. 018-0068

SHEET 22 OF 41 SHEETS

F.A.S. RTE.	SECTION	COUNTY	TOTAL SHEETS	SHEET NO.
1707	(FXX-B)B	CUMBERLAND	80	50
		CONTRACT NO. 74595		
		ILLINOIS FED. AID PROJECT		

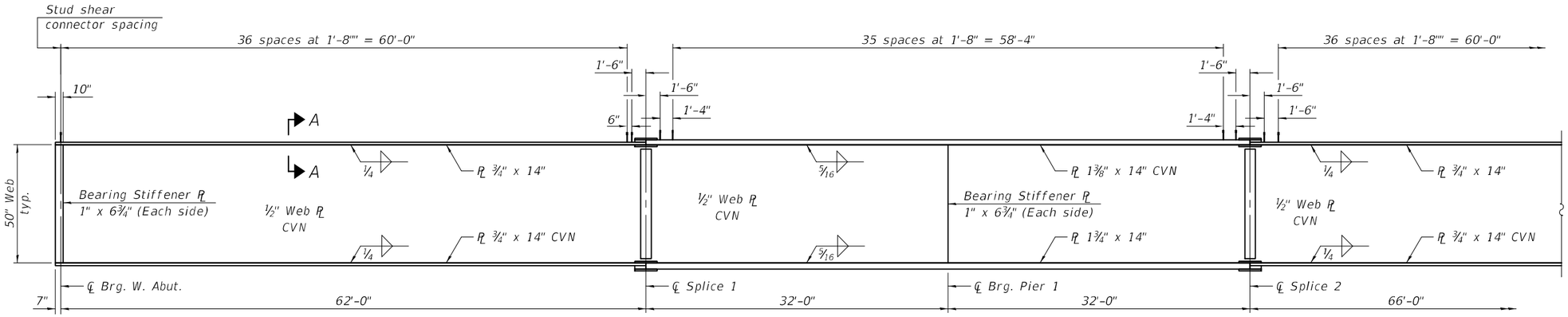

GIRDER ELEVATION

Note:
See sheet 24 of 41 for additional notes and details.

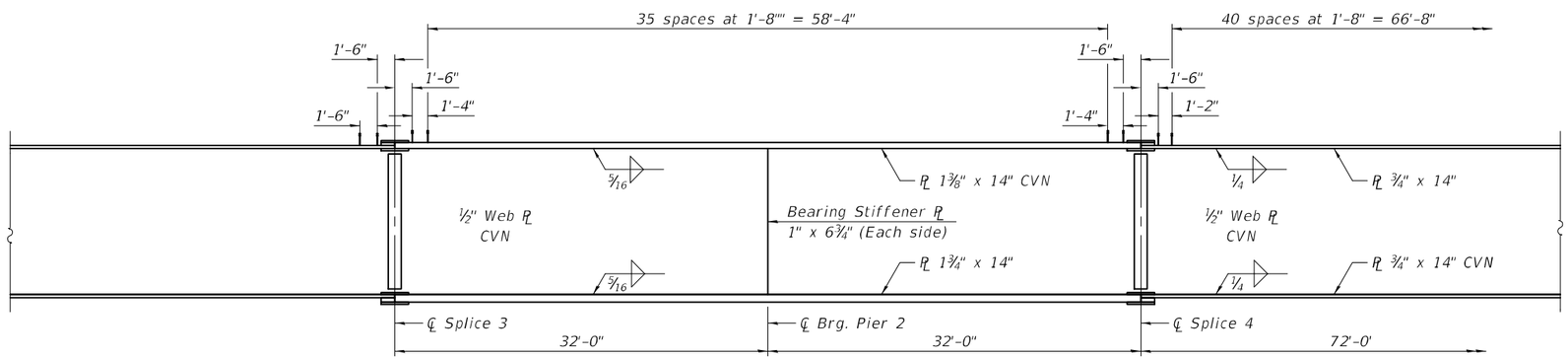

GIRDER ELEVATION

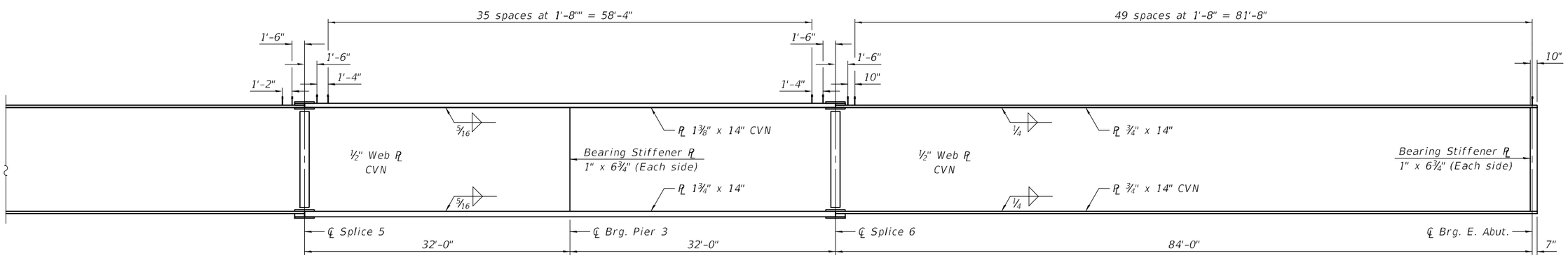

GIRDER ELEVATION

DESIGNED - RYAN P. NEGANGARD	EXAMINED	ENGINEER OF BRIDGE DESIGN	DATE - 10/7/2025	STATE OF ILLINOIS DEPARTMENT OF TRANSPORTATION	STRUCTURAL STEEL DETAILS STRUCTURE NO. 018-0068
CHECKED - DAVID H. RICHTER					
DRAWN - DENNIS A. POP	PASSED	ENGINEER OF BRIDGES AND STRUCTURES	REVISED -		SHEET 23 OF 41 SHEETS
CHECKED - R.P.N. / D.H.R.			REVISED -		

F.A.S. RTE.	SECTION	COUNTY	TOTAL SHEETS	SHEET NO.
1707	(FXX-B)B	CUMBERLAND	80	51
		CONTRACT NO. 74595		
		ILLINOIS	FED. AID PROJECT	

MODEL: 0180068-74595-023
FILE NAME: pw:\\idot-pw.bentley.com:PWIDOT\Documents\IDOT Offices\Bureau of Bridges and Structures\Projects\0180068\CADD Plans\0180068-74595.dgn
10/8/2025 7:13:09 AM

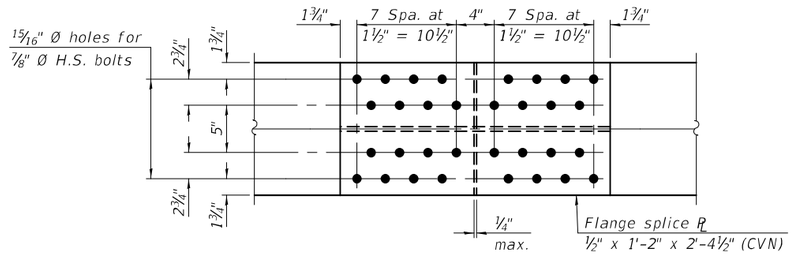

TOP and BOTTOM PLAN
(Outside Plate)

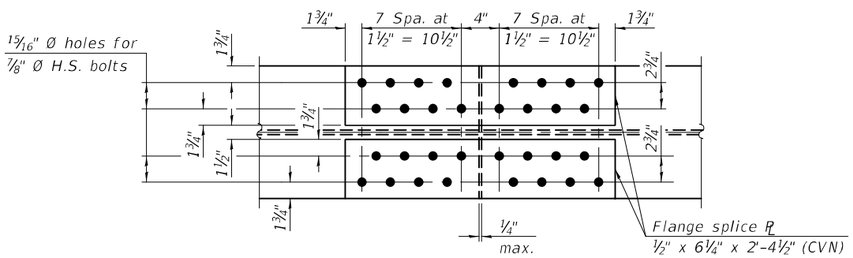

TOP and BOTTOM PLAN
(Inside Plate)

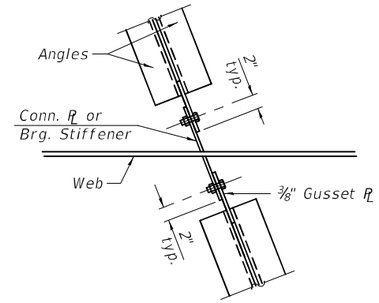

DETAIL A

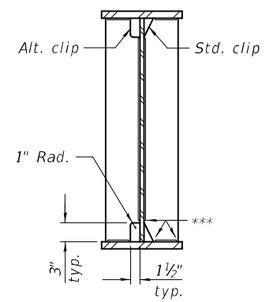

WELD LIMITS & CLIP DETAILS

*** Stop welds ¼" (⅛"±) from edges as shown, typ.

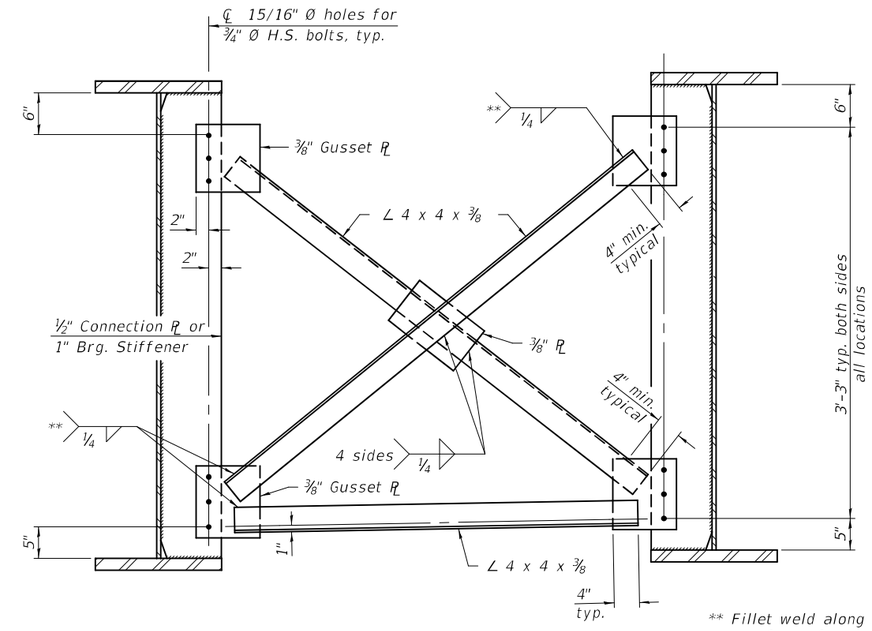

INTERIOR CROSS FRAME CF
(145 Required)

** Fillet weld along 3 sides on one face of gusset, typ.

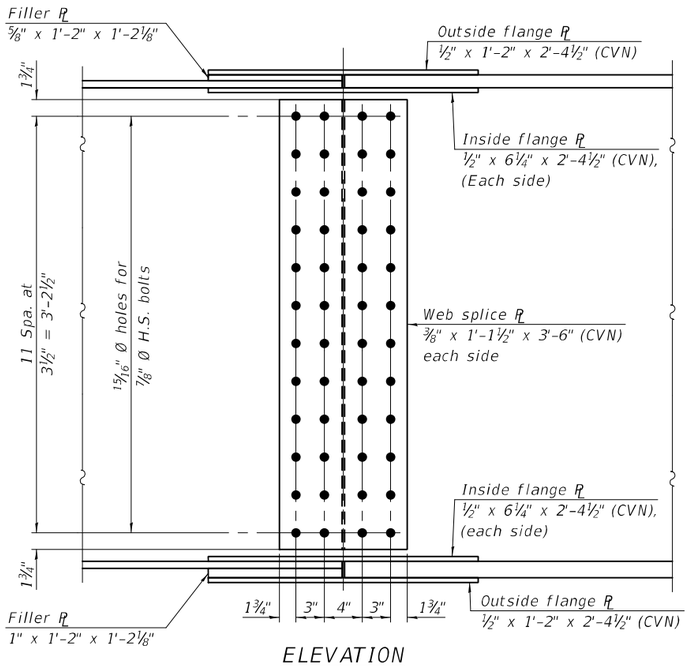

ELEVATION

SPLICE DETAILS
(36 Required)

Notes:

All cross frames shall be installed as steel is erected and secured with erection pins and bolts except as otherwise noted. Individual cross frames at supports may be temporarily disconnected to install bearing anchor rods.

Load carrying components designated "CVN" shall conform to the Charpy-V-Notch Impact Energy Requirement, Zone 2.

All plate girder flanges, webs, bearing stiffeners and splice plates, except filler plates, shall be AASHTO M270, Grade 50.

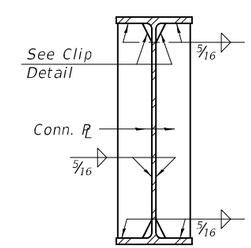

CONNECTION PLATE DETAIL

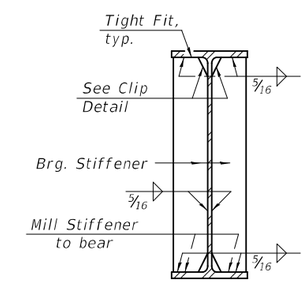

BEARING STIFFENER DETAIL

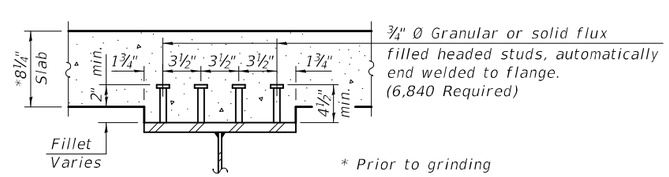

* Prior to grinding

SECTION A-A

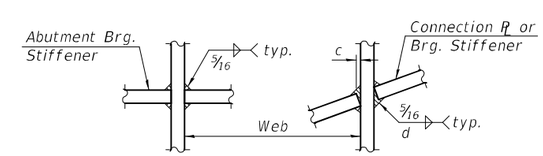

WEB WELD DETAIL
d = 5/16 + c

DESIGNED - RYAN P. NEGANGARD	EXAMINED	DATE - 10/7/2025	
CHECKED - DAVID H. RICHTER			
DRAWN - DENNIS A. POP	PASSED	REVISED -	
CHECKED - R.P.N. / D.H.R.		REVISED -	

ENGINEER OF BRIDGE DESIGN
ENGINEER OF BRIDGES AND STRUCTURES

STATE OF ILLINOIS
DEPARTMENT OF TRANSPORTATION

STRUCTURAL STEEL DETAILS
STRUCTURE NO. 018-0068

SHEET 24 OF 41 SHEETS

F.A.S. RTE.	SECTION	COUNTY	TOTAL SHEETS	SHEET NO.
1707	(FXX-B)B	CUMBERLAND	80	52
		CONTRACT NO. 74595		
		ILLINOIS	FED. AID PROJECT	

MODEL: 0180068-74595-024
FILE NAME: pw:\\ildot-pw.bentley.com:PWIDOT\Documents\IDOT Offices\Bureau of Bridges and Structures\Projects\0180068\CADD Plans\0180068-74595.dgn
10/8/2025 7:13:47 AM

GIRDER REACTION TABLE						
		W. Abut.	Pier 1	Pier 2	Pier 3	E. Abut.
LLDF		0.664	0.664	0.664	0.664	0.664
OCF		1.025	–	–	–	1.027
R_{DC1}	(k)	26.1	109.1	114.6	123.9	34.5
R_{DC2}	(k)	5.6	22.0	23.2	25.1	7.4
R_{DW}	(k)	9.5	37.1	39.3	42.4	12.5
R_{LL}	(k)	62.5	125.6	131.9	133.6	66.7
R_{IM}	(k)	14.1	23.6	24.3	24.5	14.5
R_{Total} (Strength I)(Impact)	(k)	187.9	480.6	504.6	526.5	213.2
R_{Total} (Strength I)(No Impact)	(k)	163.3	439.3	462.0	483.7	187.9

INTERIOR GIRDER MOMENT TABLE								
		0.4 Span 1	Pier 1	0.5 Span 2	Pier 2	0.5 Span 3	Pier 3	0.6 Span 4
I_s	(in^4)	18731	34040	18731	34040	18731	34040	18731
$I_c(n)$	(in^4)	46075	74641	46075	74641	46075	74641	46075
$I_c(3n)$	(in^4)	34333	54930	34333	54930	34333	54930	34333
$I_c(cr)$	(in^4)	–	40031	–	40031	–	40031	–
S_s	(in^3)	727	1377	727	1377	727	1377	727
$S_c(n)$	(in^3)	1025	1762	1025	1762	1025	1762	1025
$S_c(3n)$	(in^3)	934	1624	934	1624	934	1624	934
$S_c(cr)$	(in^3)	–	1463	–	1463	–	1463	–
S_x	(in^3)	968	1440	956	1437	958	1434	924
DC1	(k/')	0.822	0.910	0.822	0.910	0.822	0.910	0.822
M_{DC1}	('k)	400.3	1223.3	482.8	1374.2	469.3	1578.3	714.0
DC2	(k/')	0.175	0.175	0.175	0.175	0.175	0.175	0.175
M_{DC2}	('k)	87.1	246.1	106.6	280.1	104.9	319.3	154.8
DW	(k/')	0.296	0.296	0.296	0.296	0.296	0.296	0.296
M_{DW}	('k)	147.4	416.3	180.3	473.7	177.5	540.1	261.9
LLDF		0.507	0.489	0.471	0.468	0.465	0.472	0.479
M_{LL+IM}	('k)	1079.5	1460.2	1114.1	1574.8	1169.3	1614.6	1308.9
f_l (Strength I)	(ksi)	0	0	0	0	0	0	0
$M_u + \frac{1}{3} f_l S_x$	('k)	2719	5017	2957	5534	3030	6008	3769
$\phi_f M_n$	('k)	5070	6597	5008	6581	5018	6556	4837
f_s DC1	(ksi)	6.61	10.66	7.97	11.98	7.75	13.75	11.79
f_s DC2	(ksi)	1.12	2.02	1.37	2.30	1.35	2.62	1.99
f_s DW	(ksi)	1.89	3.41	2.32	3.89	2.28	4.43	3.36
f_s (LL+IM)	(ksi)	12.64	11.98	13.04	12.92	13.69	13.24	15.32
f_l (Service II)	(ksi)	0	0	0	0	0	0	0
$f_s + f_l/2$ (Service II)	(ksi)	26.05	31.66	28.61	34.95	29.17	38.02	37.06
Service II Resistance	(ksi)	47.50	47.50	47.50	47.50	47.50	47.50	47.50
$f_s + f_l/3$ (Strength I)	(ksi)	–	–	–	–	–	–	–
$\phi_f F_n$	(ksi)	–	–	–	–	–	–	–
V_f	(k)	30.2	33.4	23.5	33.1	23.7	32.6	30.6

I_s, S_s : Non-composite moment of inertia and section modulus of the steel section used for computing f_s(Total-Strength I, and Service II) due to non-composite dead loads ($in.^4$ and $in.^3$).

$I_c(n)$, $S_c(n)$: Composite moment of inertia and section modulus of the steel and deck based upon the modular ratio, "n", used for computing f_s(Total-Strength I, and Service II) in uncracked sections due to short-term composite live loads ($in.^4$ and $in.^3$).

$I_c(3n)$, $S_c(3n)$: Composite moment of inertia and section modulus of the steel and deck based upon 3 times the modular ratio, "3n", used for computing f_s(Total-Strength I, and Service II) in uncracked sections, due to long-term composite (superimposed) dead loads ($in.^4$ and $in.^3$).

$I_c(cr)$, $S_c(cr)$: Composite moment of inertia and section modulus of the steel and longitudinal deck reinforcement, used for computing f_s (Total-Strength I and Service II) in cracked sections, due to both short-term composite live loads and long-term composite (superimposed) dead loads ($in.^4$ and $in.^3$).

S_x : Section modulus about the major axis of a section to the controlling flange, tension or compression, taken as yield moment with respect to the controlling flange over the yield strength of the controlling flange ($in.^3$).

DC1: Un-factored non-composite dead load (kips/ft.).

M_{DC1} : Un-factored moment due to non-composite dead load (kip-ft.).

DC2: Un-factored long-term composite (superimposed excluding future wearing surface) dead load (kips/ft.).

M_{DC2} : Un-factored moment due to long-term composite (superimposed excluding future wearing surface) dead load (kip-ft.).

DW: Un-factored long-term composite (superimposed future wearing surface only) dead load (kips/ft.).

M_{DW} : Un-factored moment due to long-term composite (superimposed future wearing surface only) dead load (kip-ft.).

LLDF: Live Load Distribution Factor for moment and shear computed according to Article 4.6.2.2 and further IDOT provisions.

M_{LL+IM}: Un-factored live load moment plus dynamic load allowance (impact) (kip-ft.).

M_u : Strength I load combination of factored design moments (kip-ft.). $1.25 (M_{DC1} + M_{DC2}) + 1.5 M_{DW} + 1.75 M_{LL+IM}$

f_l : Factored calculated flange lateral bending stress as calculated using Article 6.10.1.6 and as further simplified by IDOT provisions (ksi).

$\phi_f M_n$: Factored nominal flexural resistance of the section determined as specified in Article 6.10.7.1 or A6 as applicable (kip-ft.).

f_s DC1: Un-factored stress at edge of flange for controlling steel flange due to vertical non-composite dead loads as calculated below (ksi).
M_{DC1} / S_s

f_s DC2: Un-factored stress at edge of flange for controlling steel flange due to vertical composite dead loads as calculated below (ksi).
$M_{DC2} / S_c(3n)$ or $M_{DC2} / S_c(cr)$ as applicable.

f_s DW: Un-factored stress at edge of flange for controlling steel flange due to vertical composite future wearing surface loads as calculated below (ksi).
$M_{DW} / S_c(3n)$ or $M_{DW} / S_c(cr)$ as applicable.

f_s (LL + IM): Un-factored stress at edge of flange for controlling steel flange due to vertical composite live load plus impact loads as calculated below (ksi).
$M_{LL+IM} / S_c(n)$ or $M_{LL+IM} / S_c(cr)$ as applicable.

$f_s + f_l/2$ (Service II): Sum of stresses as computed below (ksi).
f_s DC1 + f_s DC2 + f_s DW + 1.3 f_s (LL + IM) + $f_l/2$

Service II Resistance: Composite ($0.95R_hF_{yf}$) or noncomposite ($0.80R_hF_{yf}$) stress capacity according to Article 6.10.4.2 (ksi).

$f_s + f_l/3$ (Strength I): Sum of stresses as computed below on non-compact sections (ksi).
1.25 (f_s DC1 + f_s DC2) + 1.5 f_s DW + 1.75 f_s (LL + IM) + $f_l/3$

$\phi_f F_n$: Factored nominal flexural resistance of the section as specified in Article 6.10.7.2 or 6.10.8 as applicable (ksi).

V_f : Maximum factored shear range in span computed according to Article 6.10.10.

OCF: Obtuse Correction Factor according to Article 4.6.2.2.3c or as further simplified by IDOT provisions.

R_{DC1} : Un-factored reaction due to non-composite dead load (kip).

R_{DC2} : Un-factored reaction due to long-term composite (superimposed excluding future wearing surface) dead load (kip).

R_{DW} : Un-factored reaction due to long-term composite (superimposed future wearing surface only) dead load (kip).

R_{LL} : Un-factored live load reaction (kip).

R_{IM} : Un-factored dynamic load allowance (impact) (kip).

R_{Total} (Strength I)(Impact): Strength I load combination of factored design reactions (kip).
$1.25 (R_{DC1} + R_{DC2}) + 1.5R_{DW} + 1.75 (R_{LL} + R_{IM})$

R_{Total} (Strength I)(No Impact): Strength I load combination of factored design reactions, not including dynamic load allowance (Impact) (kip).
$1.25 (R_{DC1} + R_{DC2}) + 1.5R_{DW} + 1.75 (R_{LL})$

Note:
M_{LL} and R_{LL} include the effects of centrifugal force and superelevation.

*TOP OF WEB ELEVATIONS

Location	℄ Brg W. Abut.	℄ Splice 1	℄ Brg. Pier 1	℄ Splice 2	℄ Splice 3	℄ Brg. Pier 2	℄ Splice 4	℄ Splice 5	℄ Brg. Pier 3	℄ Splice 6	℄ Brg. E. Abut.
Girder 1	546.59	545.38	544.81	544.24	543.01	542.42	541.83	540.49	539.93	539.37	537.86
Girder 2	546.68	545.46	544.90	544.33	543.10	542.51	541.92	540.58	540.02	539.46	537.95
Girder 3	546.76	545.54	544.97	544.40	543.18	542.59	542.00	540.65	540.09	539.53	538.03
Girder 4	546.74	545.53	544.96	544.39	543.16	542.57	541.98	540.64	540.08	539.52	538.01
Girder 5	546.64	545.42	544.86	544.29	543.06	542.47	541.88	540.54	539.98	539.42	537.91
Girder 6	546.53	545.31	544.74	544.17	542.94	542.35	541.77	540.42	539.86	539.30	537.80

* For fabrication use only.

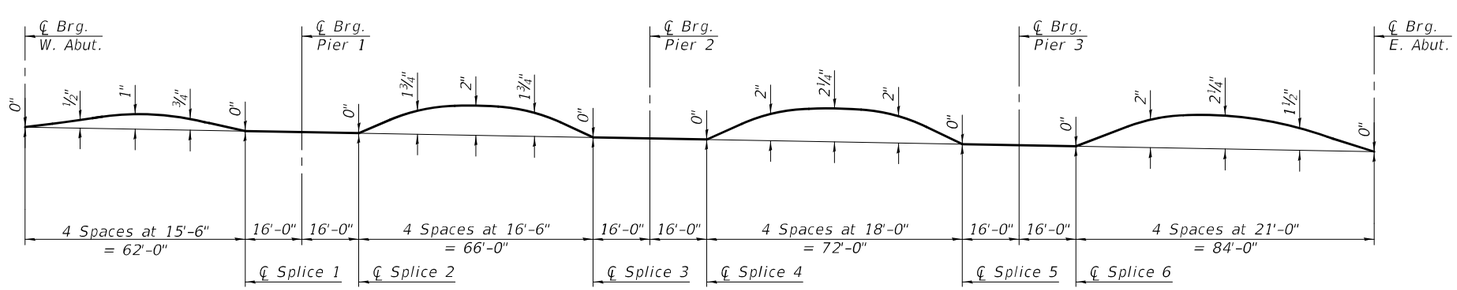

CAMBER DIAGRAM

MODEL: 0180068-74595-025
FILE NAME: pw:\\ildot-pw.bentley.com:PWIDOT\Documents\IDOT Offices\Bureau of Bridges and Structures\Projects\0180068\CADD Plans\0180068-74595.dgn

DESIGNED - RYAN P. NEGANGARD	EXAMINED	DATE - 10/7/2025	STATE OF ILLINOIS DEPARTMENT OF TRANSPORTATION
CHECKED - DAVID H. RICHTER	ENGINEER OF BRIDGE DESIGN		
DRAWN - DENNIS A. POP	PASSED	REVISED -	
CHECKED - R.P.N. / D.H.R.	ENGINEER OF BRIDGES AND STRUCTURES	REVISED -	

10/8/2025 7:14:33 AM

STRUCTURAL STEEL DETAILS
STRUCTURE NO. 018-0068

SHEET 25 OF 41 SHEETS

F.A.S. RTE.	SECTION	COUNTY	TOTAL SHEETS	SHEET NO.
1707	(FXX-B)B	CUMBERLAND	80	53
		CONTRACT NO. 74595		
		ILLINOIS FED. AID PROJECT		

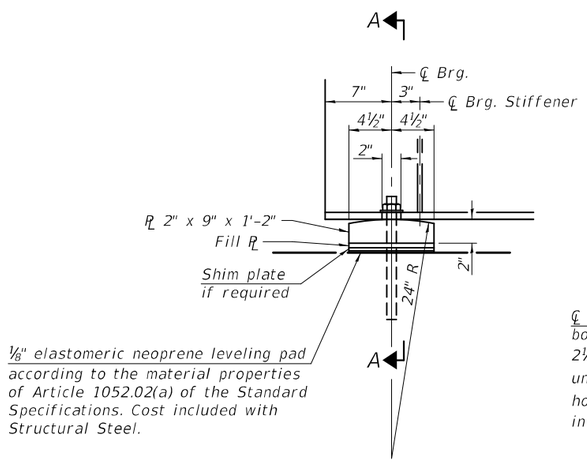

ELEVATION AT ABUTMENT
(12 Required)

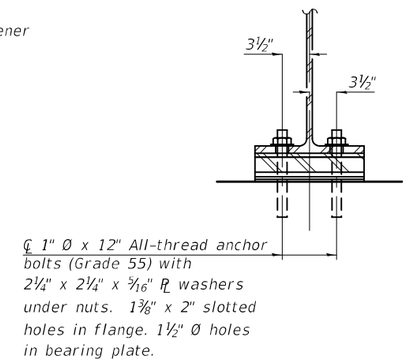

SECTION A-A

FIXED BEARING

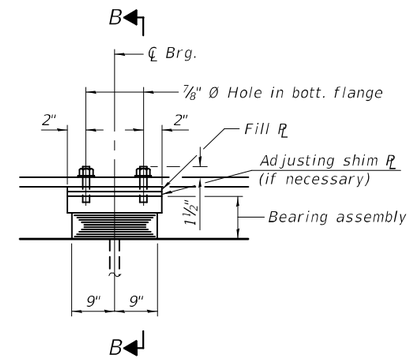

ELEVATION AT PIER

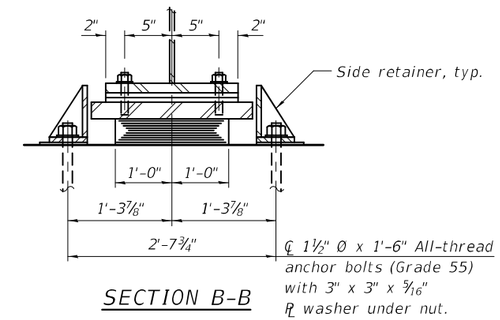

SECTION B-B

TYPE I ELASTOMERIC EXP. BRG.

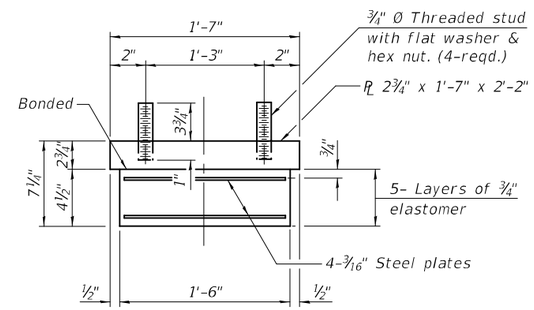

BEARING ASSEMBLY

Notes:
Side retainers and stainless steel plates shall be included in the cost of Elastomeric Bearing Assembly, Type I.
Anchor bolts and side retainers at all supports shall be installed as each member is erected unless an equivalent temporary means of lateral restraint is used.
Two ⅛" adjusting shims shall be provided for each bearing in addition to all other plates or shims and placed as shown on bearing details.
All bearing plates, shim and fill plates, side retainers, anchor bolts, nuts, and washers shall be galvanized according to AASHTO M111 or M232 as applicable.
All structural steel plates of the Bearing Assembly shall conform to the requirements of AASHTO M270 Grade 50.
The anchor bolt sizes and grades shown constitute a calculated seismic structural fuse. Substitution of higher diameter and/or grade anchor bolts will not be allowed.

Note:
Shim plates shall not be placed under bearing assembly.

FILL PLATE THICKNESS TABLE

Location	Girder 3
W. Abut.	⅛"
Pier 1	⅛"
Pier 2	⅛"
Pier 3	¼"
E. Abut.	⅛"

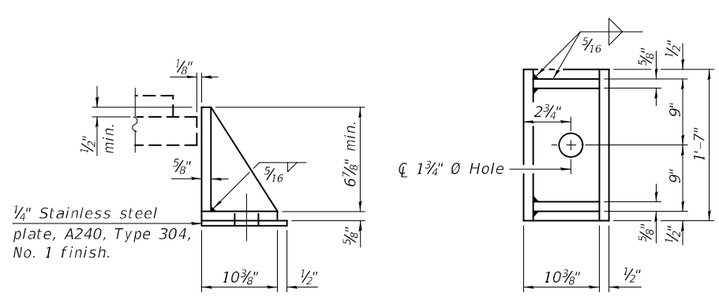

SIDE RETAINER
Equivalent rolled angle with stiffeners will be allowed in lieu of welded plates.

BILL OF MATERIAL

Item	Unit	Total
Elastomeric Bearing Assembly, Type I	Each	18
Anchor Bolts, 1"	Each	24
Anchor Bolts, 1½"	Each	36

MODEL: 0180068-74595-026
FILE NAME: pw:\\ildot-pw.bentley.com:PWIDOT\Documents\IDOT Offices\Bureau of Bridges and Structures\Projects\0180068\CADD Plans\0180068-74595.dgn
10/8/2025 7:15:08 AM

DESIGNED - RYAN P. NEGANGARD	EXAMINED	DATE - 10/7/2025	STATE OF ILLINOIS DEPARTMENT OF TRANSPORTATION
CHECKED - DAVID H. RICHTER	ENGINEER OF BRIDGE DESIGN		
DRAWN - DENNIS A. POP	PASSED	REVISED -	
CHECKED - R.P.N. / D.H.R.	ENGINEER OF BRIDGES AND STRUCTURES	REVISED -	

BEARING DETAILS
STRUCTURE NO. 018-0068
SHEET 26 OF 41 SHEETS

F.A.S. RTE.	SECTION	COUNTY	TOTAL SHEETS	SHEET NO.
1707	(FXX-B)B	CUMBERLAND	80	54
		CONTRACT NO. 74595		
		ILLINOIS FED. AID PROJECT		

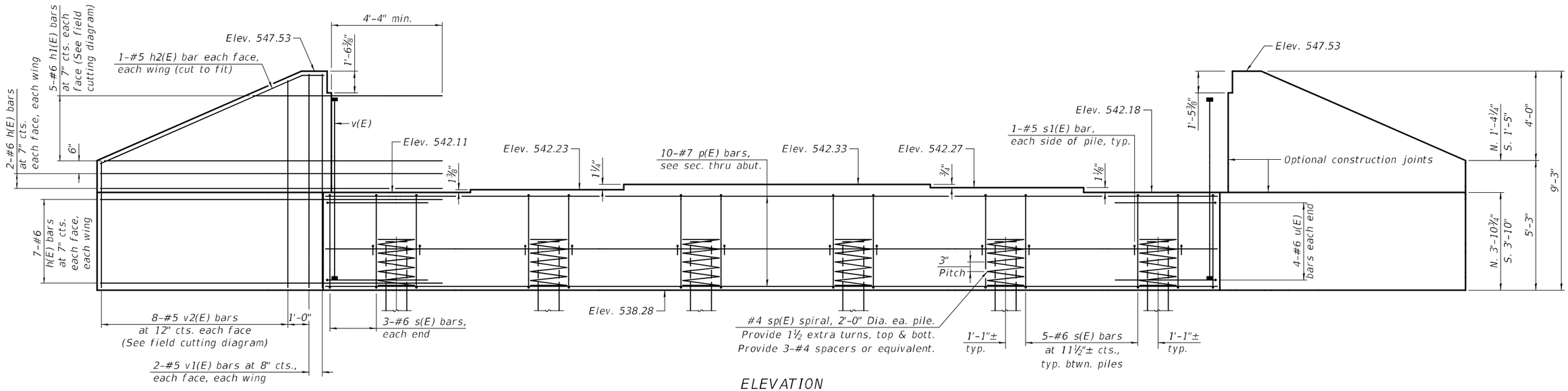

ELEVATION
(Looking West)

Note:
See sheet 29 of 41 for additional details, notes and Bill of Material.

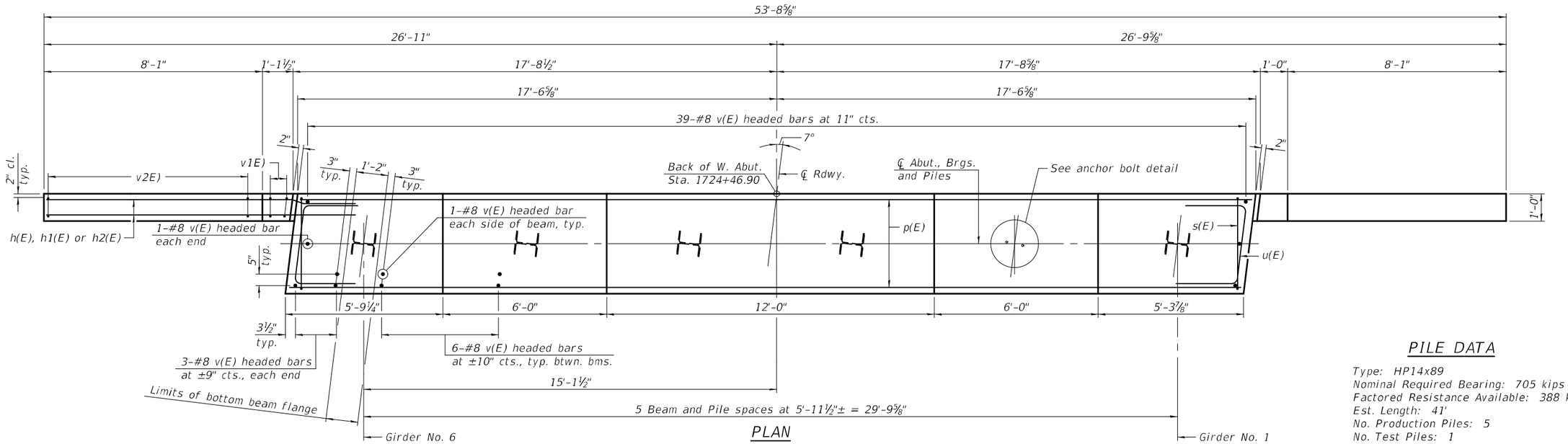

PLAN

PILE DATA

Type: HP14x89
Nominal Required Bearing: 705 kips
Factored Resistance Available: 388 kips
Est. Length: 41'
No. Production Piles: 5
No. Test Piles: 1

DESIGNED - RYAN P. NEGANGARD	EXAMINED	ENGINEER OF BRIDGE DESIGN	DATE - 10/7/2025	STATE OF ILLINOIS DEPARTMENT OF TRANSPORTATION	WEST ABUTMENT STRUCTURE NO. 018-0068
CHECKED - DAVID H. RICHTER					
DRAWN - DENNIS A. POP	PASSED	ENGINEER OF BRIDGES AND STRUCTURES	REVISED -		
CHECKED - R.P.N. / D.H.R.			REVISED -		SHEET 27 OF 41 SHEETS

F.A.S. RTE.	SECTION	COUNTY	TOTAL SHEETS	SHEET NO.
1707	(FXX-B)B	CUMBERLAND	80	55
		CONTRACT NO. 74595		
		ILLINOIS FED. AID PROJECT		

MODEL: 0180068-74595-027
FILE NAME: pw:\\ildot-pw.bentley.com:PWIDOT\Documents\IDOT Offices\Bureau of Bridges and Structures\Projects\0180068\CADD Plans\0180068-74595.dgn
10/8/2025 7:15:48 AM

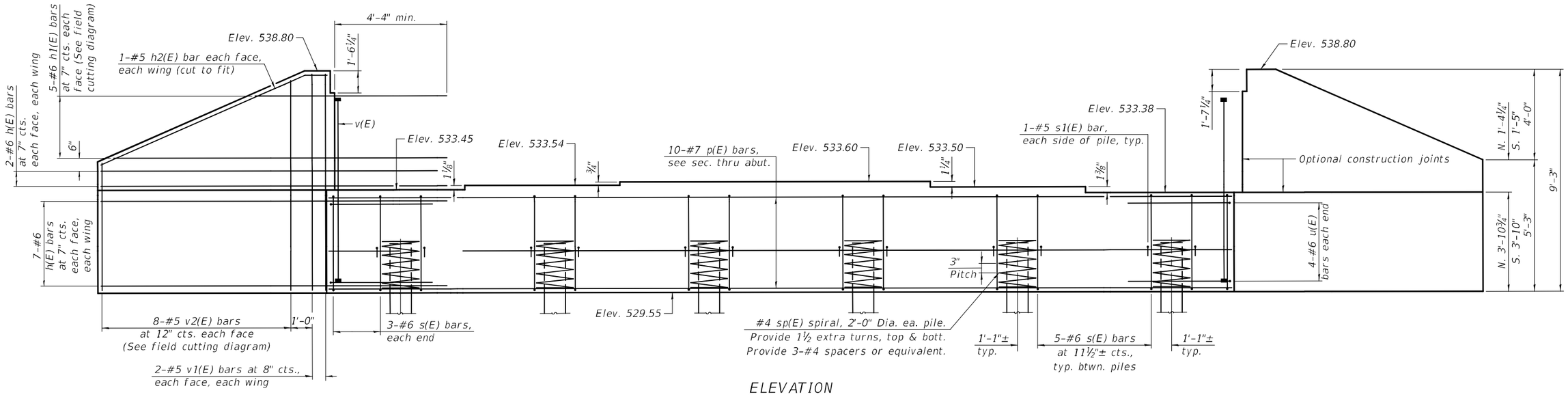

ELEVATION
(Looking East)

Note:
See sheet 29 of 41 for additional details, notes and Bill of Material.

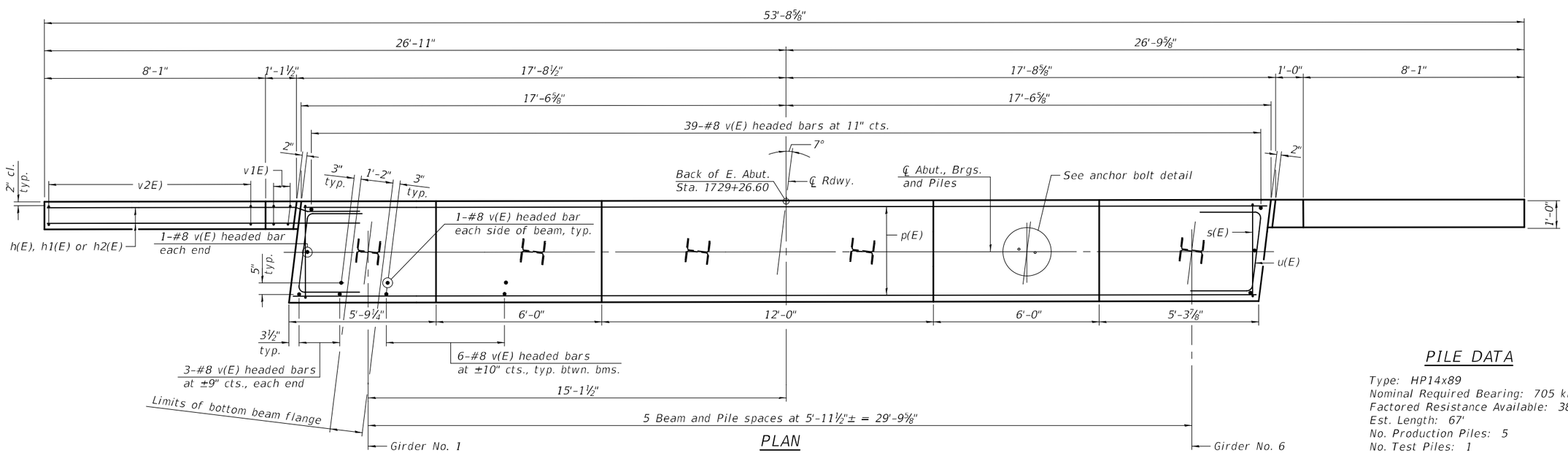

PLAN

PILE DATA

Type: HP14x89
Nominal Required Bearing: 705 kips
Factored Resistance Available: 388 kips
Est. Length: 67'
No. Production Piles: 5
No. Test Piles: 1

MODEL: 0180068-74595-028
FILE NAME: pw:\\ildot-pw.bentley.com:PWIDOT\Documents\IDOT Offices\Bureau of Bridges and Structures\Projects\0180068\CADD Plans\0180068-74595.dgn

DESIGNED -	RYAN P. NEGANGARD	EXAMINED	ENGINEER OF BRIDGE DESIGN
CHECKED -	DAVID H. RICHTER	PASSED	ENGINEER OF BRIDGES AND STRUCTURES
DRAWN -	DENNIS A. POP	DATE -	10/7/2025
CHECKED -	R.P.N. / D.H.R.	REVISED -	
		REVISED -	

10/8/2025 7:16:20 AM

STATE OF ILLINOIS
DEPARTMENT OF TRANSPORTATION

EAST ABUTMENT
STRUCTURE NO. 018-0068

SHEET 28 OF 41 SHEETS

F.A.S. RTE.	SECTION	COUNTY	TOTAL SHEETS	SHEET NO.
1707	(FXX-B)B	CUMBERLAND	80	56

CONTRACT NO. 74595

ILLINOIS FED. AID PROJECT

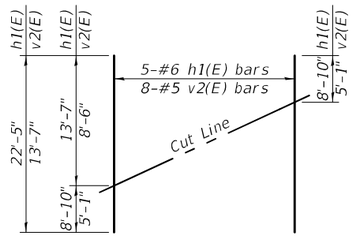

FIELD CUTTING DIAGRAM

Order h1(E) and v2(E) full length. Cut as shown and use remainder of bars in opposite wing.

BAR v(E)

(Headed. 356-#8 Bar terminators)

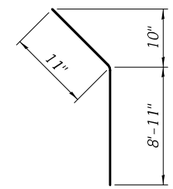

BAR h2(E)

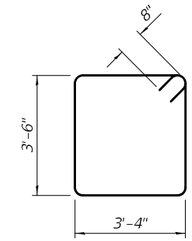

BAR s(E)

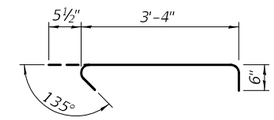

BAR s1(E)

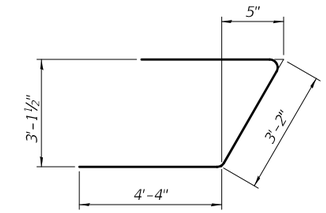

BAR u(E)

Notes:
Pour steps monolithically with cap.
Bar terminators, paid for separately. See Total Bill of Material.
For details of piles see sheet 34 of 41.

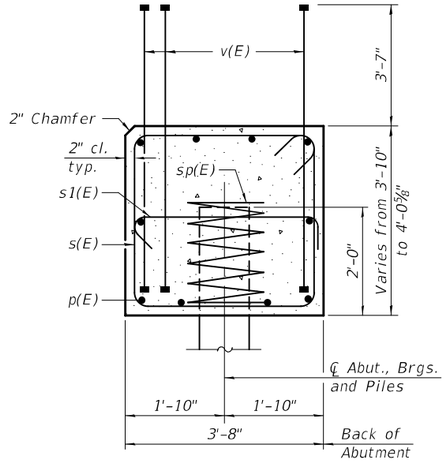

SEC. THRU ABUT.

Dimensions at right angles to abutment.

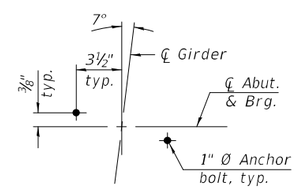

ANCHOR BOLT DETAIL

WEST ABUTMENT BILL OF MATERIAL

Bar	No.	Size	Length	Shape
h(E)	36	#6	13'-7"	
h1(E)	10	#6	22'-5"	
h2(E)	4	#5	9'-10"	
p(E)	10	#7	34'-10"	
s(E)	31	#6	15'-0"	
s1(E)	12	#5	4'-4"	
* sp(E)	6	#4	2'-0"	
u(E)	8	#6	11'-10"	
v(E)	89	#8	7'-1"	
v1(E)	8	#5	8'-11"	
v2(E)	16	#5	13'-7"	
Structure Excavation			Cu. Yd.	135
Concrete Structures			Cu. Yd.	24.1
Reinforcement Bars, Epoxy Coated			Pound	4,970
Furnishing Steel Piles HP14x89			Foot	205
Driving Piles			Foot	205
Test Pile Steel HP14x89			Each	1

* Length is height of spiral.

EAST ABUTMENT BILL OF MATERIAL

Bar	No.	Size	Length	Shape
h(E)	36	#6	13'-7"	
h1(E)	10	#6	22'-5"	
h2(E)	4	#5	9'-10"	
p(E)	10	#7	34'-10"	
s(E)	31	#6	15'-0"	
s1(E)	12	#5	4'-4"	
* sp(E)	6	#4	2'-0"	
u(E)	8	#6	11'-10"	
v(E)	89	#8	7'-1"	
v1(E)	8	#5	8'-11"	
v2(E)	16	#5	13'-7"	
Structure Excavation			Cu. Yd.	134
Concrete Structures			Cu. Yd.	24.1
Reinforcement Bars, Epoxy Coated			Pound	4,970
Furnishing Steel Piles HP14x89			Foot	335
Driving Piles			Foot	335
Test Pile Steel HP14x89			Each	1

* Length is height of spiral.

Note:
See sheet 33 of 41 for additional details, notes and Bill of Material.

* If the prevailing water surface elevation during construction is consistently different than estimated on the plans, the contractor may propose an adjustment to the top of the drilled shaft elevation as part of their installation procedure. The top of all drilled shafts within a substructure unit shall be constructed to the same elevation and extend above the prevailing water surface. The quantities and reinforcement detailing are based on the top of shaft and the estimated elevations shown and may change based on the actual elevations encountered at each shaft and the final top of shaft elevation.

** See sheet 36 of 41 for Bar Splicer detail.

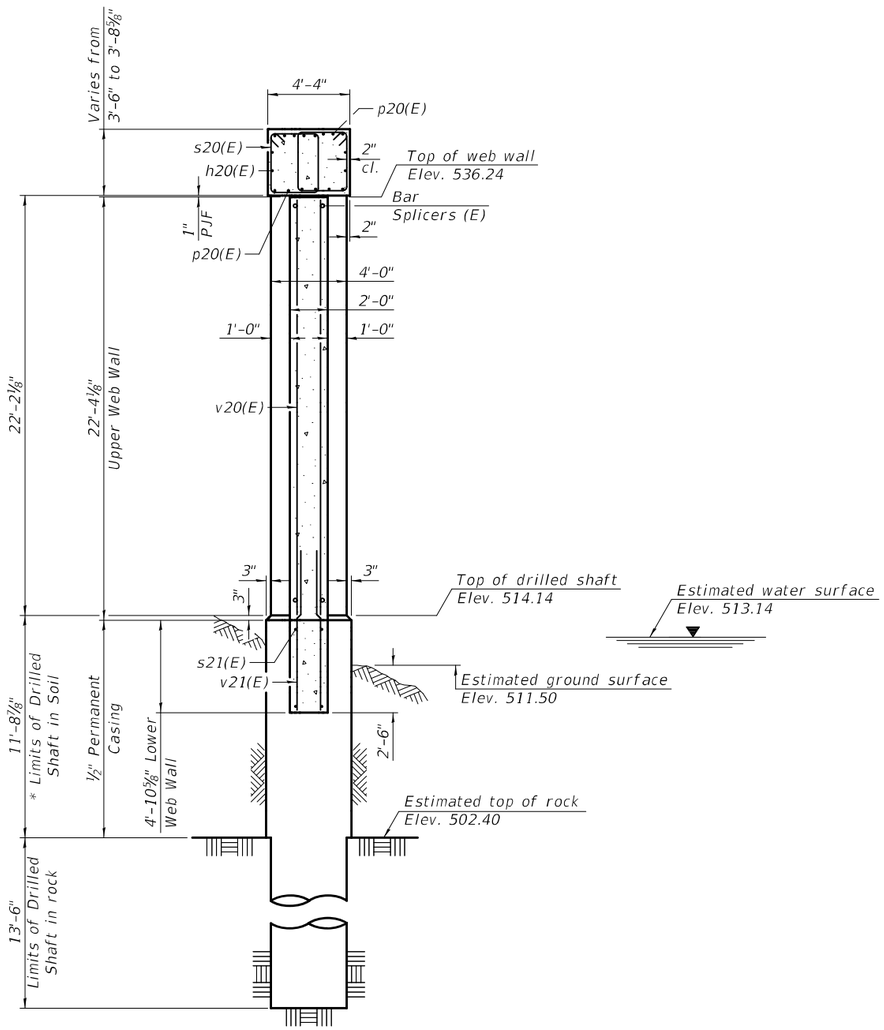

SECTION C-C

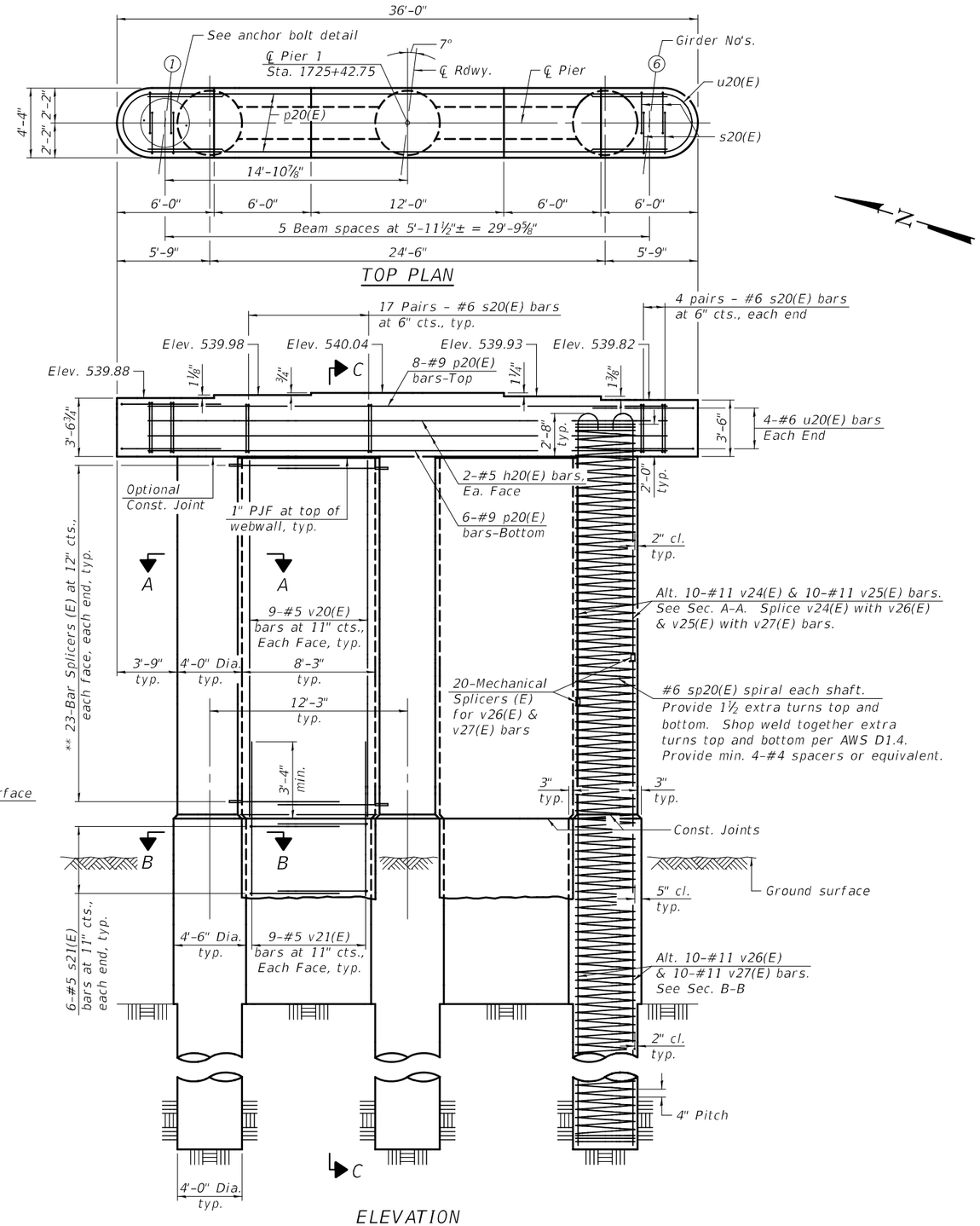

ELEVATION
(Looking East)

DESIGNED - RYAN P. NEGANGARD	EXAMINED	ENGINEER OF BRIDGE DESIGN	DATE - 10/7/2025	STATE OF ILLINOIS DEPARTMENT OF TRANSPORTATION	PIER 1 STRUCTURE NO. 018-0068	F.A.S. RTE.	SECTION	COUNTY	TOTAL SHEETS / SHEET NO.
CHECKED - DAVID H. RICHTER						1707	(FXX-B)B	CUMBERLAND	80 / 58
DRAWN - DENNIS A. POP	PASSED	ENGINEER OF BRIDGES AND STRUCTURES	REVISED -					CONTRACT NO. 74595	
CHECKED - R.P.N. / D.H.R.			REVISED -		SHEET 30 OF 41 SHEETS		ILLINOIS	FED. AID PROJECT	

MODEL: 0180068-74595-030
FILE NAME: pw:\\ildot-pw.bentley.com:PWIDOT\Documents\IDOT Offices\Bureau of Bridges and Structures\Projects\0180068\CADD Plans\0180068-74595.dgn
10/8/2025 7:17:34 AM

Note:
See sheet 33 of 41 for additional details, notes and Bill of Material.

* If the prevailing water surface elevation during construction is consistently different than estimated on the plans, the contractor may propose an adjustment to the top of the drilled shaft elevation as part of their installation procedure. The top of all drilled shafts within a substructure unit shall be constructed to the same elevation and extend above the prevailing water surface. The quantities and reinforcement detailing are based on the top of shaft and the estimated elevations shown and may change based on the actual elevations encountered at each shaft and the final top of shaft elevation.

** See sheet 36 of 41 for Bar Splicer detail.

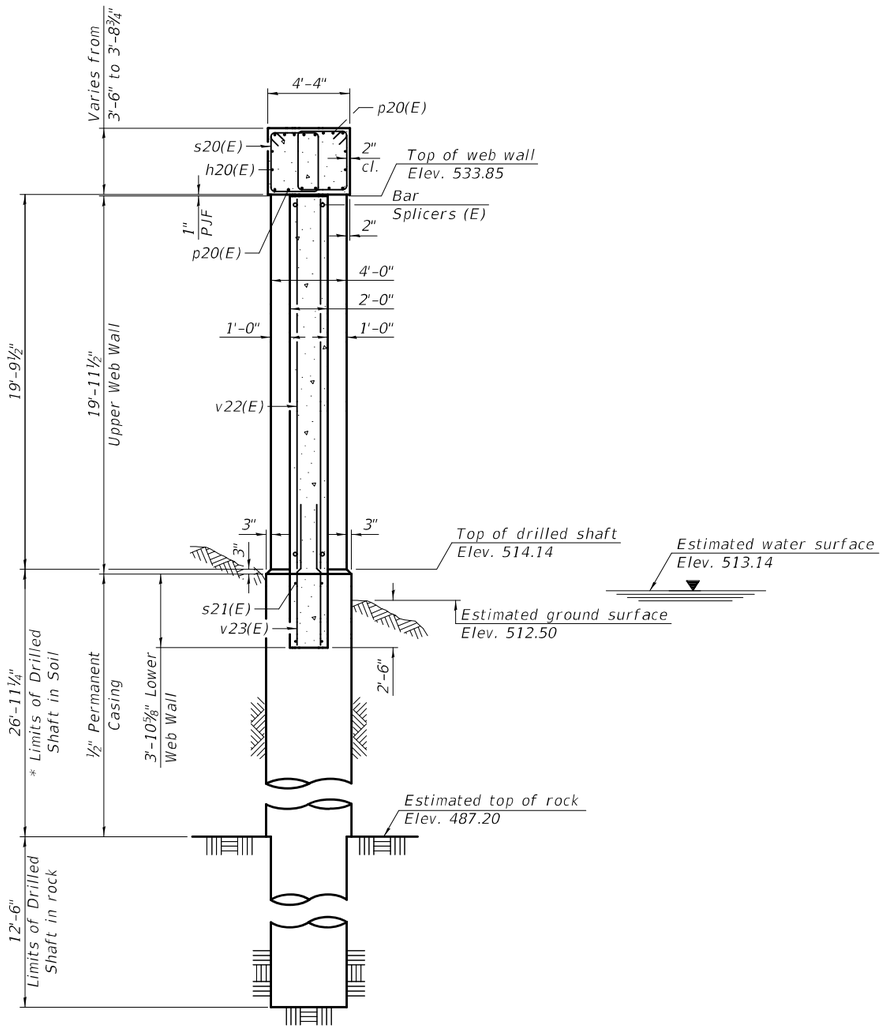

SECTION D-D

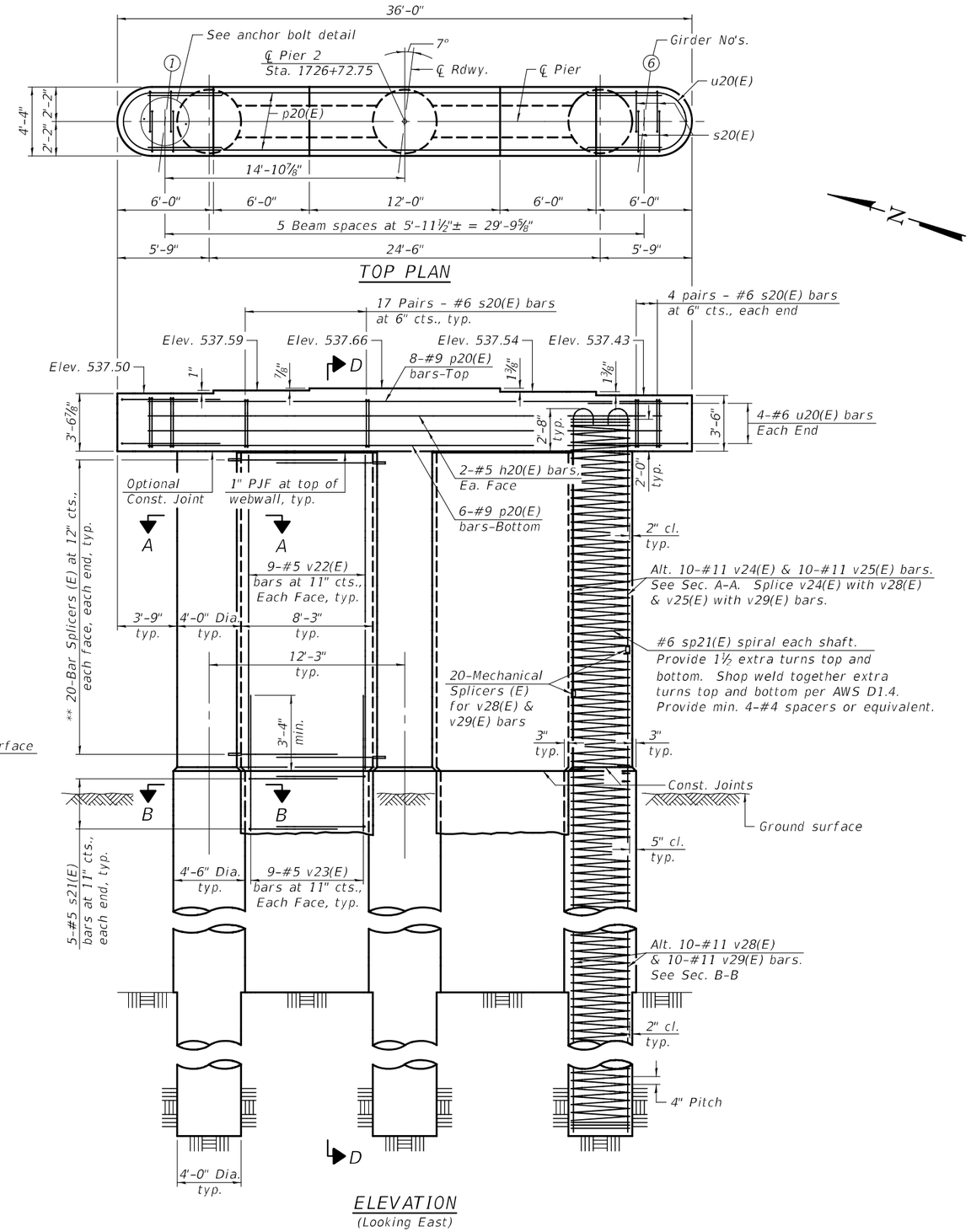

ELEVATION
(Looking East)

DESIGNED - RYAN P. NEGANGARD	EXAMINED	ENGINEER OF BRIDGE DESIGN	DATE - 10/7/2025	STATE OF ILLINOIS DEPARTMENT OF TRANSPORTATION	PIER 2 STRUCTURE NO. 018-0068
CHECKED - DAVID H. RICHTER	PASSED	ENGINEER OF BRIDGES AND STRUCTURES	REVISED -		SHEET 31 OF 41 SHEETS
DRAWN - DENNIS A. POP			REVISED -		
CHECKED - R.P.N. / D.H.R.					

F.A.S. RTE.	SECTION	COUNTY	TOTAL SHEETS	SHEET NO.
1707	(FXX-B)B	CUMBERLAND	80	59
		CONTRACT NO. 74595		
		ILLINOIS	FED. AID PROJECT	

MODEL: 0180068-74595-031
FILE NAME: pw:\\ildot-pw.bentley.com:PWIDOT\Documents\IDOT Offices\Bureau of Bridges and Structures\Projects\0180068\CADD Plans\0180068-74595.dgn
10/8/2025 7:18:12 AM

Note:
See sheet 33 of 41 for additional details, notes and Bill of Material.

* If the prevailing water surface elevation during construction is consistently different than estimated on the plans, the contractor may propose an adjustment to the top of the drilled shaft elevation as part of their installation procedure. The top of all drilled shafts within a substructure unit shall be constructed to the same elevation and extend above the prevailing water surface. The quantities and reinforcement detailing are based on the top of shaft and the estimated elevations shown and may change based on the actual elevations encountered at each shaft and the final top of shaft elevation.

** See sheet 36 of 41 for Bar Splicer detail.

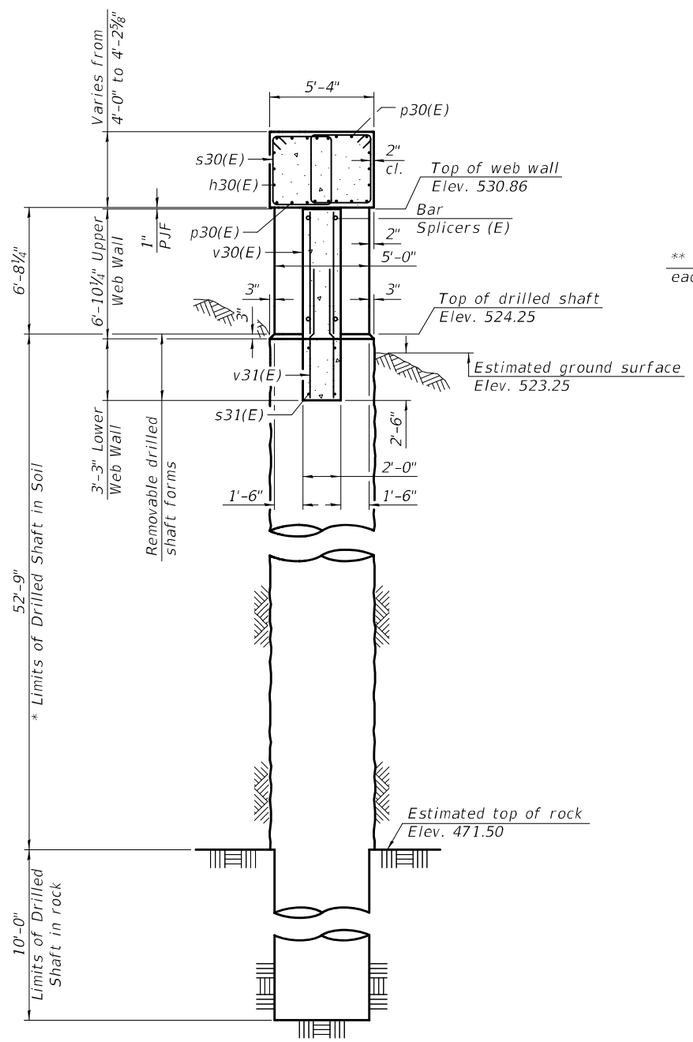

SECTION H-H

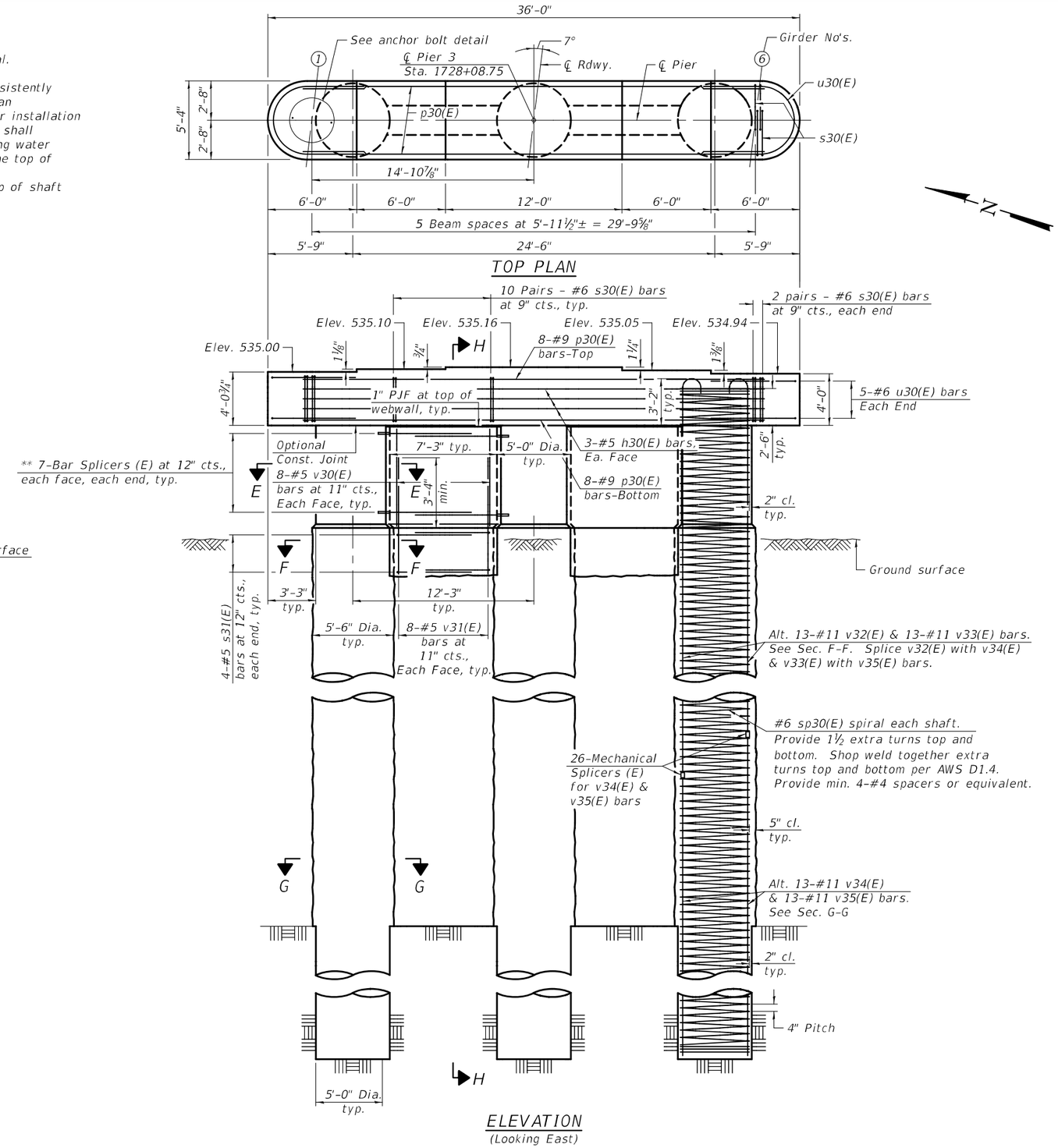

ELEVATION
(Looking East)

DESIGNED - RYAN P. NEGANGARD	EXAMINED	DATE - 10/7/2025	STATE OF ILLINOIS DEPARTMENT OF TRANSPORTATION
CHECKED - DAVID H. RICHTER	ENGINEER OF BRIDGE DESIGN		
DRAWN - DENNIS A. POP	PASSED	REVISED -	
CHECKED - R.P.N. / D.H.R.	ENGINEER OF BRIDGES AND STRUCTURES	REVISED -	

PIER 3
STRUCTURE NO. 018-0068
SHEET 32 OF 41 SHEETS

F.A.S. RTE.	SECTION	COUNTY	TOTAL SHEETS	SHEET NO.
1707	(FXX-B)B	CUMBERLAND	80	60
		CONTRACT NO. 74595		
		ILLINOIS	FED. AID PROJECT	

MODEL: 0180068-74595-032
FILE NAME: pw:\\ildot-pw.bentley.com:PWIDOT\Documents\IDOT Offices\Bureau of Bridges and Structures\Projects\0180068\CADD Plans\0180068-74595.dgn
10/8/2025 7:18:51 AM

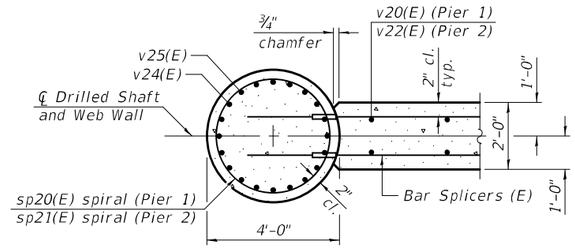

SECTION A-A

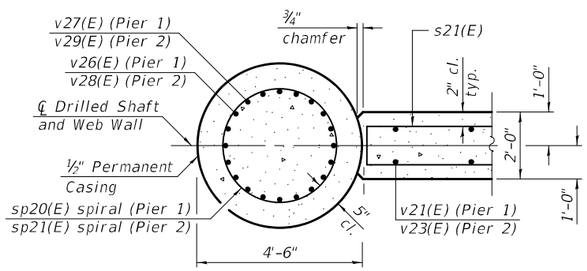

SECTION B-B

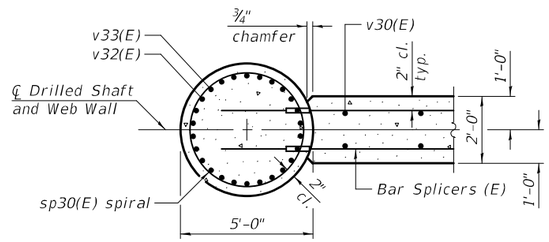

SECTION E-E

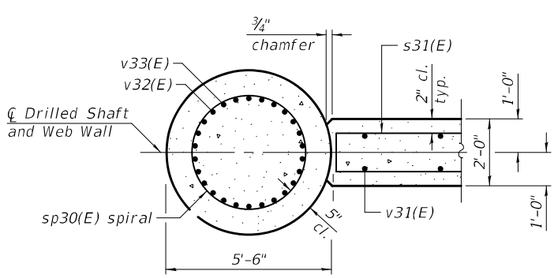

SECTION F-F

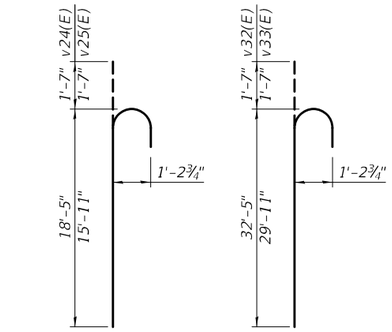

BARS v24(E) & v25(E)

BARS v32(E) & v33(E)

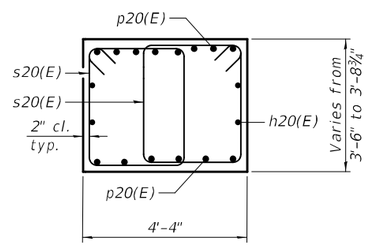

SECTION THRU PIER CAP 1 & 2

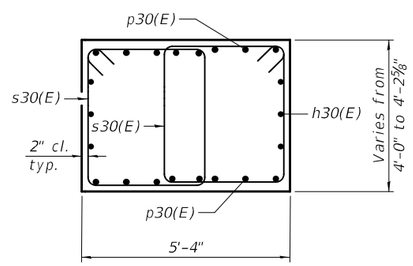

SECTION THRU PIER CAP 3

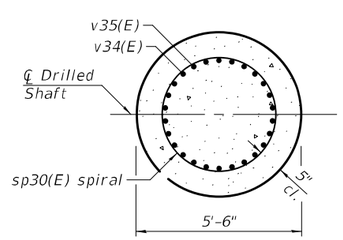

SECTION G-G

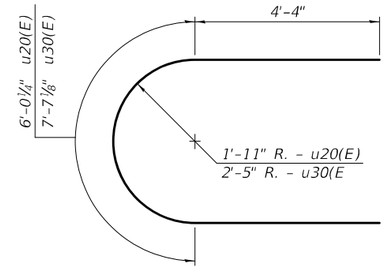

BARS u20(E) & u30(E)

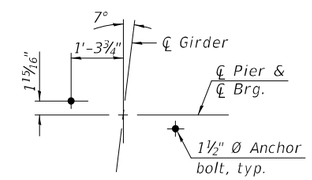

ANCHOR BOLT DETAIL

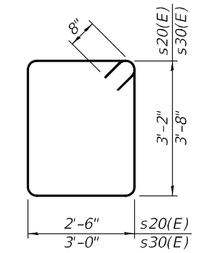

BARS s20(E) & s30(E)

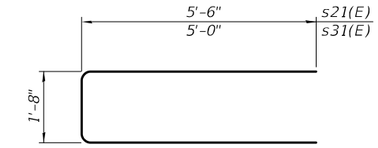

BARS s21(E) & s31(E)

Notes:

Space reinforcement in cap to miss anchor bolts.

Pour steps monolithically with cap.

If a portion of the drilled shaft web walls is under water, reinforcement may be placed underwater into forms. Concrete shall be tremied according to Article 503.08 of the Standard Specifications to an elevation of 1'-0" above the water line at the time of construction.

Cost of preformed joint filler is included with Concrete Structures.

When splicing of spiral reinforcement is necessary, the spirals shall be provided with 1½ extra turns at the ends to be spliced. These additional turns shall either be welded together according to AWS D1.4, or shall both terminate with 135° standard hook into core.

Construction Sequence for Web Wall:

1. Excavate between shafts to elevation of web wall base.
2. Set lower web wall forms through water to bear on the circular edge of drilled shafts and secure in place with fill, struts or tie forms together as required.
3. Place the lower web wall reinforcement cage into the forms using spacers to maintain proper clearances.
4. If the forms can be sealed against the shafts and streambed to allow dewatering, the reinforcement and the concrete placement may be completed in the dry. Alternatively, the rebar cage can be lowered into position through water and the concrete discharged at the base of the excavation through a tremie pipe or pump hose, displacing water, sediment, and tainted concrete out the top of the forms.
5. Construct Columns.
6. Construct upper web walls.

BILL OF MATERIAL - PIER 1

Bar	No.	Size	Length	Shape
h20(E)	4	#5	31'-8"	
p20(E)	14	#9	31'-8"	
s20(E)	84	#6	12'-8"	
s21(E)	24	#5	12'-8"	
* sp20(E)	3	#6	49'-5"	
u20(E)	8	#6	14'-9"	
v20(E)	36	#5	22'-1"	
v21(E)	36	#5	8'-1"	
v24(E)	30	#11	20'-0'	
v25(E)	30	#11	17'-6"	
v26(E)	30	#11	31'-8"	
v27(E)	30	#11	34'-2"	
Concrete Structures			Cu. Yd.	85.0
Reinforcement Bars, Epoxy Coated			Pound	29,060
Permanent Casing			Foot	34
Drilled Shaft in Soil			Cu. Yd.	20.7
Drilled Shaft in Rock			Cu. Yd.	18.8

* Length is height of spiral.

BILL OF MATERIAL - PIER 2

Bar	No.	Size	Length	Shape
h20(E)	4	#5	31'-8"	
p20(E)	14	#9	31'-8"	
s20(E)	84	#6	12'-8"	
s21(E)	20	#5	12'-8"	
* sp21(E)	3	#6	61'-3"	
u20(E)	8	#6	14'-9"	
v22(E)	36	#5	19'-8"	
v23(E)	36	#5	7'-1"	
v24(E)	30	#11	20'-0'	
v25(E)	30	#11	17'-6"	
v28(E)	30	#11	43'-6"	
v29(E)	30	#11	46'-0"	
Concrete Structures			Cu. Yd.	77.5
Reinforcement Bars, Epoxy Coated			Pound	34,460
Permanent Casing			Foot	80
Drilled Shaft in Soil			Cu. Yd.	47.6
Drilled Shaft in Rock			Cu. Yd.	17.5

* Length is height of spiral.

BILL OF MATERIAL - PIER 3

Bar	No.	Size	Length	Shape
h30(E)	6	#5	30'-8"	
p30(E)	16	#9	30'-8"	
s30(E)	48	#6	14'-8"	
s31(E)	16	#5	11'-8"	
* sp30(E)	3	#6	72'-0"	
u30(E)	10	#6	16'-4"	
v30(E)	32	#5	6'-7"	
v31(E)	32	#5	6'-5"	
v32(E)	39	#11	34'-0"	
v33(E)	39	#11	31'-6"	
v34(E)	39	#11	40'-3"	
v35(E)	39	#11	42'-9"	
Concrete Structures			Cu. Yd.	53.8
Reinforcement Bars, Epoxy Coated			Pound	48,840
Drilled Shaft in Soil			Cu. Yd.	139.3
Drilled Shaft in Rock			Cu. Yd.	21.8

* Length is height of spiral.

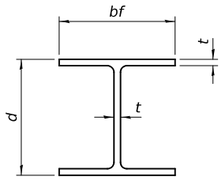

STEEL PILE TABLE

Designation	Depth d	Flange width bf	Web and Flange thickness t	Encasement diameter A
HP 18x181	18	18	1	36"
x157	17¾"	17⅞"	⅞"	36"
x135	17½"	17¾"	¾"	36"
HP 16x183	16½"	16½"	1⅛"	36"
x162	16¼"	16⅛"	1"	36"
x141	16	16	⅞"	36"
x121	15¾"	15⅞"	¾"	36"
HP 14x117	14¼"	14⅞"	13/16"	30"
x102	14"	14¾"	11/16"	30"
x89	13⅞"	14¾"	⅝"	30"
x73	13⅝"	14⅝"	½"	30"
HP 12x84	12¼"	12¼"	11/16"	24"
x74	12⅛"	12¼"	⅝"	24"
x63	12"	12⅛"	½"	24"
x53	11¾"	12"	7/16"	24"
HP 10x57	10"	10¼"	9/16"	24"
x42	9¾"	10⅛"	7/16"	24"
HP 8x36	8"	8⅛"	7/16"	18"

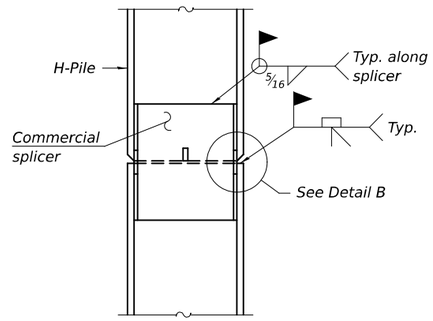

ELEVATION

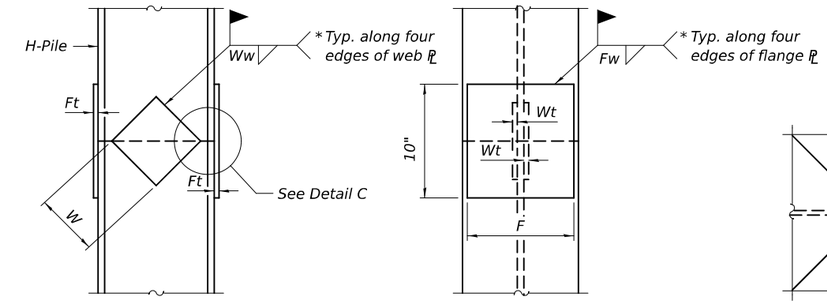

ELEVATION

END VIEW

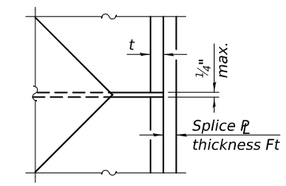

DETAIL C

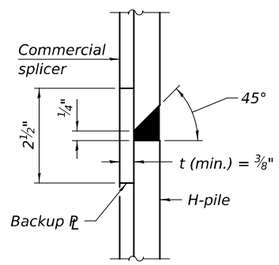

DETAIL B

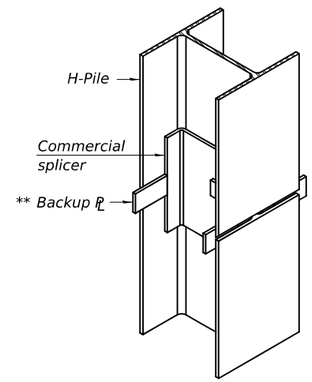

ISOMETRIC VIEW

WELDED COMMERCIAL SPLICE

Designation	F	Ft	Fw	W	Wt	Ww
HP 18x181	15½"	1½"	1"	9½"	⅞"	¾"
x157	15¼"	1¼"	1"	9½"	⅞"	¾"
x135	15¼"	1¼"	1"	9½"	⅞"	¾"
HP 16x183	13¾"	1½"	1"	8¼"	⅞"	¾"
x162	13½"	1½"	1"	8¼"	¾"	⅝"
x141	13½"	1¼"	⅞"	8¼"	¾"	⅝"
x121	13½"	1¼"	⅞"	8¼"	¾"	⅝"
HP 14x117	12½"	1¼"	⅞"	7¾"	⅝"	½"
x102	12½"	1"	¾"	7¾"	⅝"	½"
x89	12½"	⅞"	11/16"	7¾"	⅝"	½"
x73	12½"	¾"	9/16"	7¾"	⅝"	½"
HP 12x84	10"	1"	11/16"	6½"	⅝"	½"
x74	10"	⅞"	11/16"	6½"	⅝"	½"
x63	10"	¾"	½"	6½"	½"	⅜"
x53	10"	¾"	½"	6½"	½"	⅜"
HP 10x57	8"	⅞"	9/16"	5¼"	½"	⅜"
x42	8"	¾"	9/16"	5¼"	½"	⅜"
HP 8x36	6¾"	⅝"	7/16"	4"	½"	⅜"

WELDED PLATE FIELD SPLICE

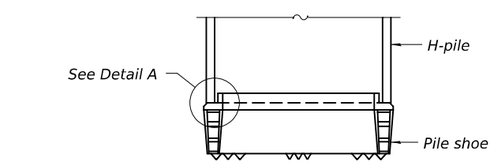

ELEVATION

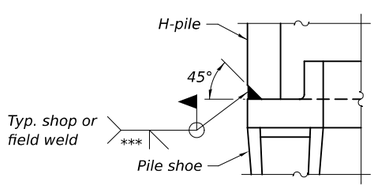

DETAIL A

SHOE ATTACHMENT

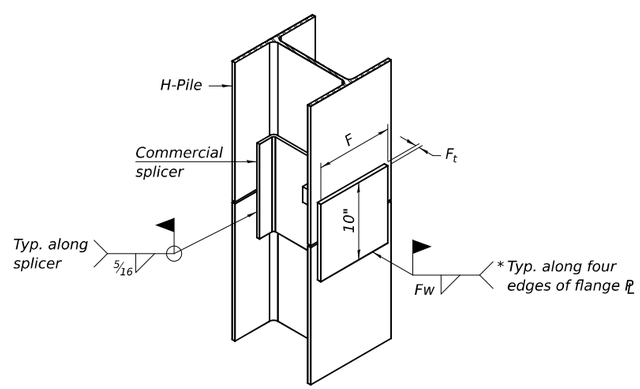

ISOMETRIC VIEW

WELDED COMMERCIAL SPLICE ALTERNATE

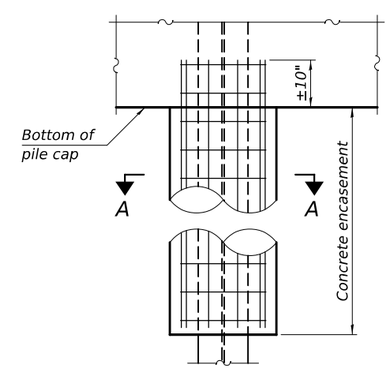

ELEVATION

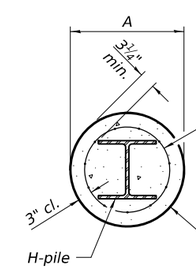

Welded wire fabric 6 x 6- W4.0 x W4.0 weighing 58#/100 sq. ft. Bend as required to fit into wall. Reinforcement for encasements at abutments is included with Concrete Encasement according to Article 503.13 of the Standard Specifications.

Forms for encasement may be omitted when soil conditions permit.

SECTION A-A

INDIVIDUAL PILE CONCRETE ENCASEMENT

(when specified)

Note:
The steel H-piles shall be according to AASHTO M270 Grade 50.

* Interrupt welds ¼" from end of web and/or each flange.

** Remove portions of backup PL's that extend outside the flanges.

*** Weld size per pile shoe manufacturer (5/16" min.).

F-HP 4-4-2025

DESIGNED - RYAN P. NEGANGARD	EXAMINED	DATE - 10/7/2025	STATE OF ILLINOIS DEPARTMENT OF TRANSPORTATION
CHECKED - DAVID H. RICHTER	ENGINEER OF BRIDGE DESIGN		
DRAWN - DENNIS A. POP	PASSED	REVISED -	
CHECKED - R.P.N. / D.H.R.	ENGINEER OF BRIDGES AND STRUCTURES	REVISED -	

HP PILE DETAILS
STRUCTURE NO. 018-0068

SHEET 34 OF 41 SHEETS

F.A.S. RTE.	SECTION	COUNTY	TOTAL SHEETS	SHEET NO.
1707	(FXX-B)B	CUMBERLAND	80	62

CONTRACT NO. 74595

ILLINOIS | FED. AID PROJECT

MODEL: 0180068-74595-034
FILE NAME: pw://ildot-pw.bentley.com:PWIDOT/Documents/IDOT O ces/Bureau of Bridges and Structures/OBM Projects/0180068/CADData/Bridge/0180068-74595.dgn

10/7/2025 2:47:58 PM

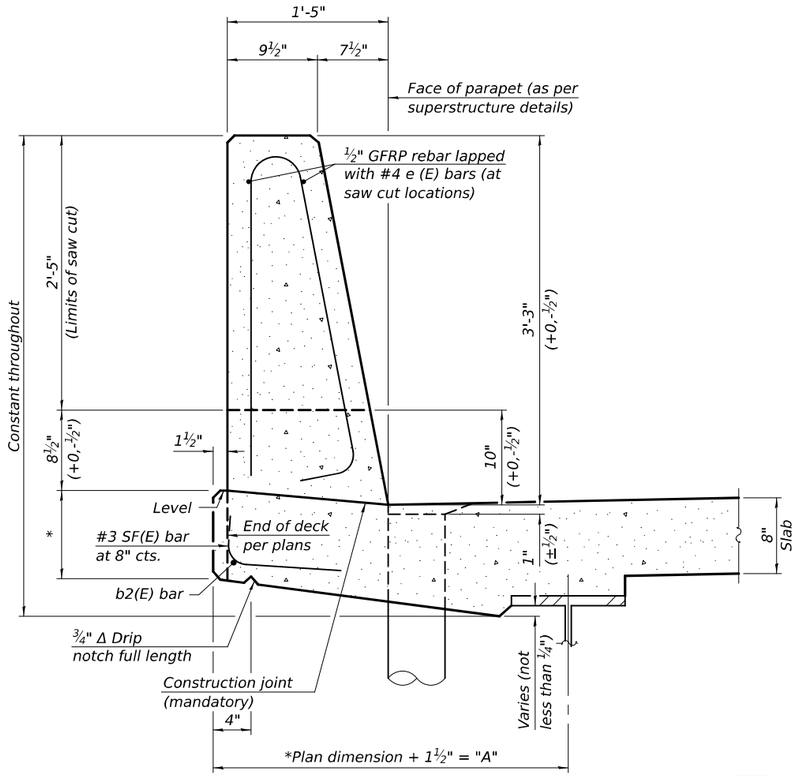

39" CONSTANT-SLOPE PARAPET SECTION

(Showing dimensions, d(E), and ½" Ø GFRP rebar)

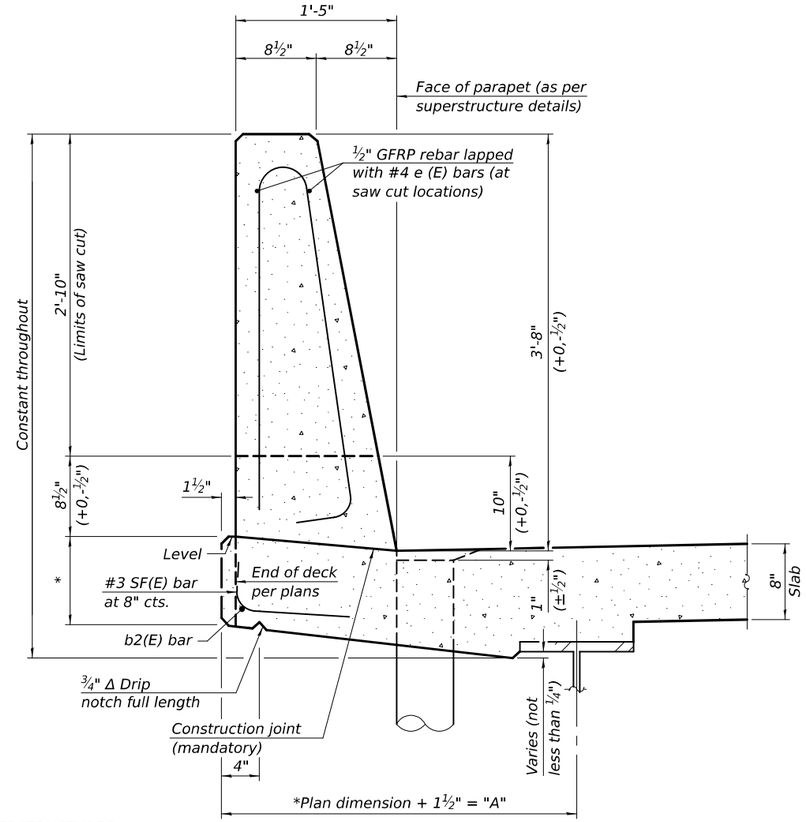

44" CONSTANT-SLOPE PARAPET SECTION

(Showing dimensions, d(E), and ½" Ø GFRP rebar)

STEEL SUPERSTRUCTURES

*See Superstructure Details.

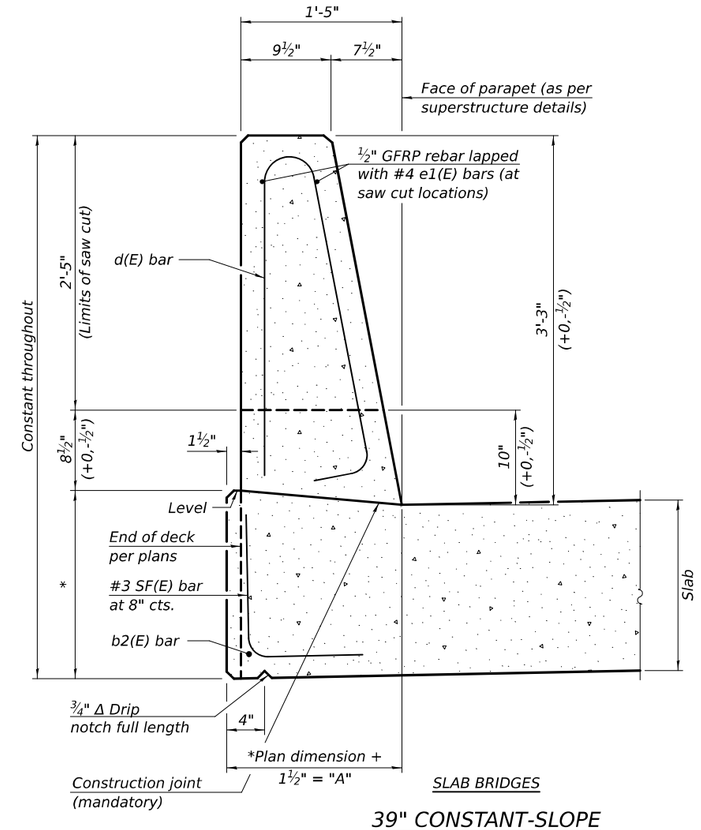

SLAB BRIDGES

39" CONSTANT-SLOPE PARAPET SECTION

(Showing dimensions, d(E), and ½" Ø GFRP rebar)

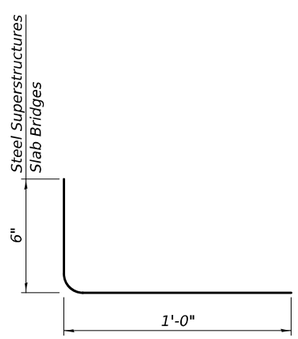

SF(E) BAR

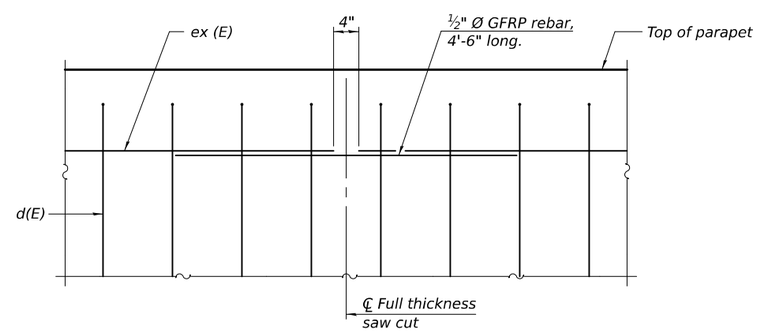

DETAIL - GFRP REBAR STIFFENING ELEVATION

(Place as shown in parapet section at each parapet joint location.)

Notes:
All dimensions shall remain the same as shown on superstructure details, except dimension "A" which is to be revised as shown.
Additional concrete needed to revise dimension "A" (39" and 44" parapets):
Steel Superstructures: 0.00348 cu. yds./ft.
Slab Bridge Superstructures: cu. yds./ft.
Place full depth aluminum sheets as shown on superstructure details.
Replace all cork joint filler locations with a full thickness saw cut.
Steel and slab superstructures shown. Other superstructure types similar.

SFP 39-44 10/27/2023

DESIGNED - RYAN P. NEGANGARD	EXAMINED	DATE - 10/7/2025	STATE OF ILLINOIS DEPARTMENT OF TRANSPORTATION
CHECKED - DAVID H. RICHTER	ENGINEER OF BRIDGE DESIGN		
DRAWN - DENNIS A. POP	PASSED	REVISED -	
CHECKED - R.P.N. / D.H.R.	ENGINEER OF BRIDGES AND STRUCTURES	REVISED -	

CONCRETE PARAPET SLIPFORMING OPTION
STRUCTURE NO. 018-0068

SHEET 35 OF 41 SHEETS

F.A.S. RTE.	SECTION	COUNTY	TOTAL SHEETS	SHEET NO.
1707	(FXX-B)B	CUMBERLAND	80	63

CONTRACT NO. 74595

ILLINOIS FED. AID PROJECT

MODEL: 0180068-74595-035
FILE NAME: pw://idot-pw.bentley.com:PWIDOT/Documents/IDOT O ces/Bureau of Bridges and Structures/OBM Projects/0180068/CADData/Bridge/0180068-74595.dgn

10/7/2025 2:48:29 PM

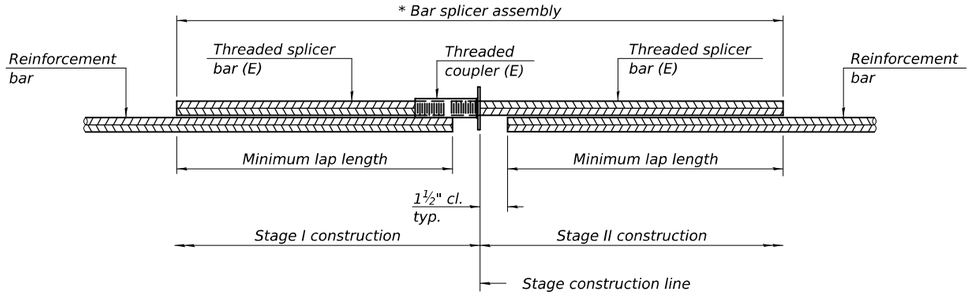

STANDARD BAR SPLICER ASSEMBLY PLAN

Only bar splicer assemblies as presented on the approved QPL list may be used.

Threaded splicer bar length = min. lap length + 1½" + thread length

* Epoxy not required on Bar Splicer Assembly components used in conjunction with black bars.

Location	Bar size	No. assemblies required	Minimum lap length
Pier 1 Web Walls	#5	184	See Web Wall Bar Splicer Detail
Pier 2 Web Walls	#5	160	See Web Wall Bar Splicer Detail
Pier 3 Web Walls	#5	56	See Web Wall Bar Splicer Detail

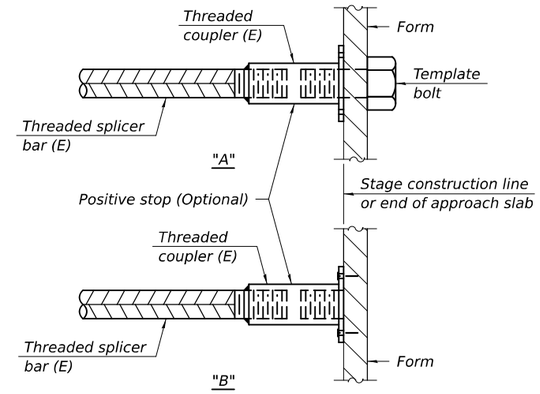

INSTALLATION AND SETTING METHODS

"A" : Set bar splicer assembly by means of a template bolt.
"B" : Set bar splicer assembly by nailing to wood forms or cementing to steel forms.
(E) : Indicates epoxy coating.

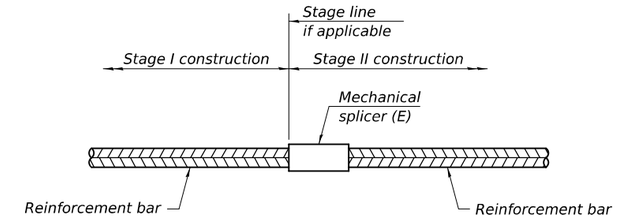

STANDARD MECHANICAL SPLICER

Location	Bar size	No. assemblies required
Pier 1 Drilled Shafts	#11	60
Pier 2 Drilled Shafts	#11	60
Pier 3 Drilled Shafts	#11	78

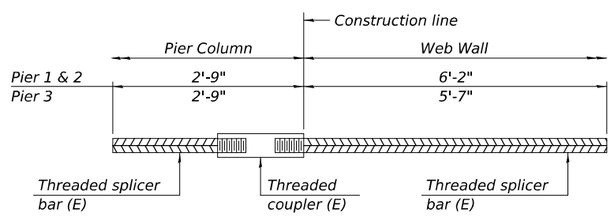

WEB WALL BAR SPLICER DETAIL

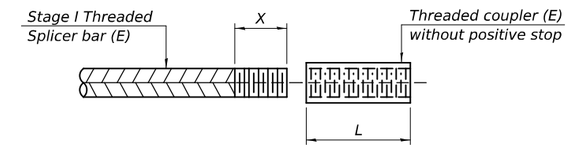

THREADING OF ASSEMBLIES

The threaded length "X" shall be no more than L/2. The bar should be tightened until 0-1 thread(s) is/are exposed.

Notes:
Splicer bars shall be deformed with threaded ends and have a minimum 60 ksi yield strength.
All reinforcement shall be lapped and tied to the splicer bars.
Bar splicer assemblies shall be epoxy coated according to the requirements for reinforcement bars. See Section 508 of the Standard Specifications.
See approved list of bar splicer assemblies and mechanical splicers for alternatives.

DESIGNED -	RYAN P. NEGANGARD	EXAMINED	ENGINEER OF BRIDGE DESIGN
CHECKED -	DAVID H. RICHTER		
DRAWN -	DENNIS A. POP	PASSED	ENGINEER OF BRIDGES AND STRUCTURES
CHECKED -	R.P.N. / D.H.R.		

DATE - 10/7/2025
REVISED -
REVISED -

STATE OF ILLINOIS
DEPARTMENT OF TRANSPORTATION

BAR SPLICER ASSEMBLY AND MECHANICAL SPLICER DETAILS
STRUCTURE NO. 018-0068

SHEET 36 OF 41 SHEETS

F.A.S. RTE.	SECTION	COUNTY	TOTAL SHEETS	SHEET NO.
1707	(FXX-B)B	CUMBERLAND	80	64

CONTRACT NO. 74595
ILLINOIS FED. AID PROJECT

Illinois Department of Transportation
Division of Highways
Illinois Department of Transportation

SOIL BORING LOG

Date 6/2/20

ROUTE FAS 1707 DESCRIPTION US 40 over Embarras River LOGGED BY E. Sandschafer

SECTION (FXX-B)B LOCATION E 1/2, SEC. 10, TWP. 9N, RNG. 9E, 3rd PM,
Latitude N 39.237189, Longitude W 88.187512

COUNTY Cumberland DRILLING METHOD Hollow stem auger & split spoon HAMMER Auto ETR = 91.8% @ 57.4 bpm

STRUCT. NO. 018-0008 (Existing) 018-0068 (Proposed)
Station 1726+91.75

BORING NO. 1 (West Abutment)
Station 1724+36
Offset 7.5 ft RT
Ground Surface Elev. 547.41 ft

Surface Water Elev. 510.34 ft
Stream Bed Elev. 506.34 ft

Groundwater Elev.:
First Encounter 517.9 ft
Upon Completion 528.4 ft
After 24 Hrs. 529.4 ft

Description	Elev.	DEPTH (ft)	BLOWS (/6")	UCS Qu (tsf)	MOIST (%)
4-3/4" Asphalt over 11" Concrete over 6" Aggregate	545.61				
Brown, SANDY CLAY					
Medium, wet		-5	1 2 3	0.7 B	14
Soft		-10	WH 1 2	0.5 B	12
Stiff, moist	535.41	-15	2 3 4	1.5 B	15
Medium, moist, brown, CLAY with SILT	530.41	-20	2 3 1	1.0 B	13
Medium, moist, brown, CLAY	527.41		1 2 2	0.8 B	25
Stiff, moist, brown, CLAY	522.91		2 3 1	1.7 B	17
Medium	520.41	-25	1 2 2	0.8 B	24
Medium, moist, grey, SANDY CLAY			1 2 WH	0.7 B	16
Very soft, moist, grey, SANDY LOAM		-30	1 2 WH	0.2 B	19
Soft		-35	1 2 1	0.3 B	19
Very soft, wet		-40	1 2 1	0.2 B	23

The Unconfined Compressive Strength (UCS) Failure Mode is indicated by (B-Bulge, S-Shear, P-Penetrometer, E-Estimated)
The SPT (N value) is the sum of the last two blow values in each sampling zone (AASHTO T206), WH-Weight of Hammer, NT-Not Tested.

BBS, form 137 (Rev. 8-99)

Illinois Department of Transportation
Division of Highways
Illinois Department of Transportation

SOIL BORING LOG

Date 6/2/20

ROUTE FAS 1707 DESCRIPTION US 40 over Embarras River LOGGED BY E. Sandschafer

SECTION (FXX-B)B LOCATION E 1/2, SEC. 10, TWP. 9N, RNG. 9E, 3rd PM,
Latitude N 39.237189, Longitude W 88.187512

COUNTY Cumberland DRILLING METHOD Hollow stem auger & split spoon HAMMER Auto ETR = 91.8% @ 57.4 bpm

STRUCT. NO. 018-0008 (Existing) 018-0068 (Proposed)
Station 1726+91.75

BORING NO. 1 (West Abutment)
Station 1724+36
Offset 7.5 ft RT
Ground Surface Elev. 547.41 ft

Surface Water Elev. 510.34 ft
Stream Bed Elev. 506.34 ft

Groundwater Elev.:
First Encounter 517.9 ft
Upon Completion 528.4 ft
After 24 Hrs. 529.4 ft

Description	Elev.	DEPTH (ft)	BLOWS (/6")	UCS Qu (tsf)	MOIST (%)
	506.61		3 10	0.2 B	11
Grey, sandy clay SHALE					
Very dense, moist	502.41	-45	50 5-5/16"	8.0 E	6
Borehole continued with rock coring.		-50	50 1-7/8"		
		-55	50 5/8"		
		-60			

The Unconfined Compressive Strength (UCS) Failure Mode is indicated by (B-Bulge, S-Shear, P-Penetrometer, E-Estimated)
The SPT (N value) is the sum of the last two blow values in each sampling zone (AASHTO T206), WH-Weight of Hammer, NT-Not Tested.

BBS, form 137 (Rev. 8-99)

Illinois Department of Transportation
Division of Highways
Illinois Department of Transportation

ROCK CORE LOG

Date 6/2/20

ROUTE FAS 1707 DESCRIPTION US 40 over Embarras River LOGGED BY E. Sandschafer

SECTION (FXX-B)B LOCATION E 1/2, SEC. 10, TWP. 9N, RNG. 9E, 3rd PM,
Latitude N 39.237189, Longitude W 88.187512

COUNTY Cumberland CORING METHOD Rotary, surf set diamond bit

STRUCT. NO. 018-0008 (Existing) 018-0068 (Proposed)
Station 1726+91.75

CORING BARREL TYPE & SIZE NW, conv dbl bbl, split inner
Core Diameter 2.1 in
Top of Rock Elev. 502.41 ft
Begin Core Elev. 502.41 ft

BORING NO. 1 (West Abutment)
Station 1724+36
Offset 7.5 ft RT
Ground Surface Elev. 547.41 ft

Description	Elev.	DEPTH (ft)	CORE (#)	RECOVERY (%)	R.Q.D. (%)	CORE TIME (min/ft)	STRENGTH (tsf)
Grey, sandy clay SHALE Depth 45.0', Moisture Content: 6.3%, Dry Density: 143.7 pcf	502.41		B1C1	64	64	2.36	140.9
	497.41	-50					
Grey, sandy clay SHALE Depth 52.2', Moisture Content: 6.4%, Dry Density: 143.4 pcf	492.41	-55	B1C2	100	82	2.59	123.1
Grey, sandy clay SHALE Depth 59.5', Moisture Content: 6.2%, Dry Density: 143.4 pcf	487.41	-60	B1C3	100	92	2.33	87.1
Benchmark: BM 201 - Chiseled square on wingwall at northwest corner of Structure No. 018-0008. End of Boring		-65					

Color pictures of the cores Available on Request
Cores will be stored for examination until 09/29/2025
The "Strength" column represents the uniaxial compressive strength of the core sample (ASTM D-2938)

BBS, form 138 (Rev. 8-99)

MODEL: 0180068-74595-037
FILE NAME: pw:\\ildo-pw.bentley.com:PWIDOT\Documents\IDOT Offices\Bureau of Bridges and Structures\Projects\0180068\CADD Plans\0180068-74595.dgn

DESIGNED - RYAN P. NEGANGARD	EXAMINED	DATE - 10/7/2025	STATE OF ILLINOIS DEPARTMENT OF TRANSPORTATION
CHECKED - DAVID H. RICHTER	ENGINEER OF BRIDGE DESIGN	REVISED -	
DRAWN - DENNIS A. POP	PASSED	REVISED -	
CHECKED - R.P.N. / D.H.R.	ENGINEER OF BRIDGES AND STRUCTURES		

SOIL BORING LOGS
STRUCTURE NO. 018-0068
SHEET 37 OF 41 SHEETS

F.A.S. RTE.	SECTION	COUNTY	TOTAL SHEETS	SHEET NO.
1707	(FXX-B)B	CUMBERLAND	80	65
		CONTRACT NO. 74595		
		ILLINOIS	FED. AID PROJECT	

10/8/2025 7:21:18 AM

Illinois Department of Transportation
Division of Highways
Illinois Department of Transportation

SOIL BORING LOG

Date 10/1/20

ROUTE FAS 1707 DESCRIPTION US 40 over Embarras River LOGGED BY E. Sandschafer

SECTION (FXX-B)B LOCATION E 1/2, SEC. 10, TWP. 9N, RNG. 9E, 3rd PM,
Latitude N 39.237503, Longitude W 88.186506

COUNTY Cumberland DRILLING METHOD Hollow stem auger & split spoon HAMMER Auto ETR = 91.8% @ 57.4 bpm

STRUCT. NO. 018-0008 (Existing) 018-0068 (Proposed)
Station 1726+91.75

BORING NO. 2 (Middle Pier)
Station 1727+38
Offset 56.0 ft LT
Ground Surface Elev. 523.55 ft

Surface Water Elev. 510.34 ft
Stream Bed Elev. 506.34 ft

Groundwater Elev.:
First Encounter 509.1 ft ▼
Upon Completion 511.6 ft ▽
After 24 Hrs. 511.6 ft ▽

Description	Elev.	DEPTH (ft)	BLOWS (/6")	UCS Qu (tsf)	MOIST (%)
Tan, SAND			1		
Loose, wet			3 4		7
	519.05				
Medium, moist, brown, SILTY LOAM with SAND		-5	2		
			4 3	0.5 B	16
			1		
			2 2	0.8 B	23
		-10	1		
			1 2	0.6 B	23
	511.55				
Soft, moist, brown, SANDY LOAM			2		
			3 3	0.5 BS	21
	509.05				
Loose, wet, brown, fine, SAND 7.3 % passing #200 sieve.		-15	2		
			3 4		23
			5		
			4 4		16
	503.55	-20	3		

Description	Elev.	DEPTH (ft)	BLOWS (/6")	UCS Qu (tsf)	MOIST (%)
Medium, wet, brown, fine SAND with 1/4" angular gravel Washed 9.2 % passing #200 sieve.			5 9		15
			1		
			1 12		15
		-25	7		
9.3 % passing #200 sieve.			10 10		15
			7		
With 1/4" rounded gravel			9 9		11
		-30	5		
			9 12		8
		-35	6		
With 1/8" rounded gravel 5.9 % passing #200 sieve.			8 10		15
	483.55	-40	6		

The Unconfined Compressive Strength (UCS) Failure Mode is indicated by (B-Bulge, S-Shear, P-Penetrometer, E-Estimated)
The SPT (N value) is the sum of the last two blow values in each sampling zone (AASHTO T206), WH-Weight of Hammer, NT-Not Tested.

BBS, form 137 (Rev. 8-99)

Illinois Department of Transportation
Division of Highways
Illinois Department of Transportation

SOIL BORING LOG

Date 10/1/20

ROUTE FAS 1707 DESCRIPTION US 40 over Embarras River LOGGED BY E. Sandschafer

SECTION (FXX-B)B LOCATION E 1/2, SEC. 10, TWP. 9N, RNG. 9E, 3rd PM,
Latitude N 39.237503, Longitude W 88.186506

COUNTY Cumberland DRILLING METHOD Hollow stem auger & split spoon HAMMER Auto ETR = 91.8% @ 57.4 bpm

STRUCT. NO. 018-0008 (Existing) 018-0068 (Proposed)
Station 1726+91.75

BORING NO. 2 (Middle Pier)
Station 1727+38
Offset 56.0 ft LT
Ground Surface Elev. 523.55 ft

Surface Water Elev. 510.34 ft
Stream Bed Elev. 506.34 ft

Groundwater Elev.:
First Encounter 509.1 ft ▼
Upon Completion 511.6 ft ▽
After 24 Hrs. 511.6 ft ▽

Description	Elev.	DEPTH (ft)	BLOWS (/6")	UCS Qu (tsf)	MOIST (%)
Medium, wet, brown, coarse, SAND with 1/8 "-5/8" rounded gravel			8 8		6
Grey, fine 9.7% passing #200.		-45	8		
			8 8		16
11.9% passing #200.		-50	12		
			13 11		13
	471.05				
Very dense, moist, grey, SHALE	470.35		20		
Benchmark: BM 202 - Permanent Survey Marker on wingwall at southeast corner of Structure No. 018-0008.			50 1-5/8"		7
End of Boring		-55	50 1-1/16"		
		-60			

The Unconfined Compressive Strength (UCS) Failure Mode is indicated by (B-Bulge, S-Shear, P-Penetrometer, E-Estimated)
The SPT (N value) is the sum of the last two blow values in each sampling zone (AASHTO T206), WH-Weight of Hammer, NT-Not Tested.

BBS, form 137 (Rev. 8-99)

MODEL: 0180068-74595-038
FILE NAME: pw:\\ildot-pw.bentley.com:PWIDOT\Documents\IDOT Offices\Bureau of Bridges and Structures\Projects\0180068\CADD Plans\0180068-74595.dgn
10/8/2025 7:22:16 AM

DESIGNED - RYAN P. NEGANGARD	EXAMINED	ENGINEER OF BRIDGE DESIGN	DATE - 10/7/2025
CHECKED - DAVID H. RICHTER			
DRAWN - DENNIS A. POP	PASSED	ENGINEER OF BRIDGES AND STRUCTURES	REVISED -
CHECKED - R.P.N. / D.H.R.			REVISED -

STATE OF ILLINOIS
DEPARTMENT OF TRANSPORTATION

SOIL BORING LOGS
STRUCTURE NO. 018-0068

SHEET 38 OF 41 SHEETS

F.A.S. RTE.	SECTION	COUNTY	TOTAL SHEETS	SHEET NO.
1707	(FXX-B)B	CUMBERLAND	80	66
		CONTRACT NO. 74595		
		ILLINOIS	FED. AID PROJECT	

Illinois Department of Transportation — SOIL BORING LOG

Division of Highways
Illinois Department of Transportation

Date 9/30/20

ROUTE FAS 1707 DESCRIPTION US 40 over Embarras River LOGGED BY E. Sandschafer

SECTION (FXX-B)B LOCATION E 1/2, SEC. 10, TWP. 9N, RNG. 9E, 3rd PM,
Latitude N 39.237296, Longitude W 88.186129

COUNTY Cumberland DRILLING METHOD Hollow stem auger & split spoon HAMMER Auto ETR = 91.8% @ 57.4 bpm

STRUCT. NO. 018-0008 (Existing) 018-0068 (Proposed)
Station 1726+91.75

BORING NO. 3 (East Pier)
Station 1728+25
Offset 28.0 ft RT
Ground Surface Elev. 523.45 ft

Surface Water Elev. 510.34 ft
Stream Bed Elev. 506.34 ft

Groundwater Elev.:
First Encounter 506.5 ft ▼
Upon Completion 511.5 ft ▽
After 24 Hrs. 511.5 ft ▽

Description	Elev.	DEPTH (ft)	BLOWS (/6")	UCS Qu (tsf)	MOIST (%)
Brown, SILTY CLAY LOAM					
Soft, moist, grey			1		
			2	0.5	21
			2	E	
Medium		-5	1		
			2	0.8	20
			3	B	
	516.45				
Stiff, moist, grey, SILTY CLAY			1		
			2	1.0	21
			2	B	
		-10	2		
			4	1.7	20
			4	B	
	511.45 ▽				
Very soft, moist, grey, SANDY LOAM			1		
			1	0.3	25
			1	B	
		-15	WH		
			WH	0.2	28
			1	B	
	506.45 ▼				
Loose, wet, brown, coarse, SAND with 3/4" angular gravel			3		
			3		14
			4		
	503.45	-20	9		

Description	Elev.	DEPTH (ft)	BLOWS (/6")	UCS Qu (tsf)	MOIST (%)
Medium, moist, brown, gravelly, SANDY LOAM			10		10
			10		
	501.45				
Loose, wet, brown, SAND			4		
			5		13
			5		
1-1/4" rock in sampler.		-25	4		
			5		14
			6		
7.4% passing #200.			6		
			7		16
			8		
		-30	6		
With 3/8"-1/2" rounded gravel.			11		8
			14		
	488.95				
Medium, wet, brown, gravelly, SANDY LOAM		-35	4		
			10		14
			15		
	483.45	-40	11		

The Unconfined Compressive Strength (UCS) Failure Mode is indicated by (B-Bulge, S-Shear, P-Penetrometer, E-Estimated)
The SPT (N value) is the sum of the last two blow values in each sampling zone (AASHTO T206), WH-Weight of Hammer, NT-Not Tested.

BBS, form 137 (Rev. 8-99)

Illinois Department of Transportation — SOIL BORING LOG

Division of Highways
Illinois Department of Transportation

Date 9/30/20

ROUTE FAS 1707 DESCRIPTION US 40 over Embarras River LOGGED BY E. Sandschafer

SECTION (FXX-B)B LOCATION E 1/2, SEC. 10, TWP. 9N, RNG. 9E, 3rd PM,
Latitude N 39.237296, Longitude W 88.186129

COUNTY Cumberland DRILLING METHOD Hollow stem auger & split spoon HAMMER Auto ETR = 91.8% @ 57.4 bpm

STRUCT. NO. 018-0008 (Existing) 018-0068 (Proposed)
Station 1726+91.75

BORING NO. 3 (East Pier)
Station 1728+25
Offset 28.0 ft RT
Ground Surface Elev. 523.45 ft

Surface Water Elev. 510.34 ft
Stream Bed Elev. 506.34 ft

Groundwater Elev.:
First Encounter 506.5 ft ▼
Upon Completion 511.5 ft ▽
After 24 Hrs. 511.5 ft ▽

Description	Elev.	DEPTH (ft)	BLOWS (/6")	UCS Qu (tsf)	MOIST (%)
Medium, wet, brown, gravelly, SAND 8.3% passing #200.			11		10
			10		
1-1/2" rock stuck in shoe.		-45	10		
			8		
			9		
		-50	4		
			6		19
			13		
	471.45				
Very dense, moist, grey, SHALE			50 5"		
	470.45		50 1-7/8"		7
Borehole continued with rock coring.			50 1-1/4"		
		-55			
		-60			

The Unconfined Compressive Strength (UCS) Failure Mode is indicated by (B-Bulge, S-Shear, P-Penetrometer, E-Estimated)
The SPT (N value) is the sum of the last two blow values in each sampling zone (AASHTO T206), WH-Weight of Hammer, NT-Not Tested.

BBS, form 137 (Rev. 8-99)

Illinois Department of Transportation — ROCK CORE LOG

Division of Highways
Illinois Department of Transportation

Date 9/30/20

ROUTE FAS 1707 DESCRIPTION US 40 over Embarras River LOGGED BY E. Sandschafer

SECTION (FXX-B)B LOCATION E 1/2, SEC. 10, TWP. 9N, RNG. 9E, 3rd PM,
Latitude N 39.237296, Longitude W 88.186129

COUNTY Cumberland CORING METHOD Rotary, surf set diamond bit

STRUCT. NO. 018-0008 (Existing) 018-0068 (Proposed)
Station 1726+91.75

CORING BARREL TYPE & SIZE NW, conv dbl bbl, split inner

Core Diameter 2.1 in
Top of Rock Elev. 470.45 ft
Begin Core Elev. 470.45 ft

BORING NO. 3 (East Pier)
Station 1728+25
Offset 28.0 ft RT
Ground Surface Elev. 523.45 ft

Description	Elev.	DEPTH (ft)	CORE (#)	RECOVERY (%)	R.Q.D. (%)	CORE TIME (min/ft)	STRENGTH (tsf)
Grey, Clay, SHALE Depth 53.5', Moisture Content: 7.1%, Dry Density: 137.0 pcf	470.45		B3C1	50	24	4.26	45.2
		-55					
Grey, Clay, SHALE Broken, not representative of in-situ conditions.	465.45		B3C2	100	0	3.67	
		-60					
Benchmark: BM 202 - Permanent Survey Marker on wingwall at southeast corner of Structure No. 018-0008, End of Boring	460.45						
		-65					
		-70					

Color pictures of the cores Available on Request
Cores will be stored for examination until 09/29/2025
The "Strength" column represents the uniaxial compressive strength of the core sample (ASTM D-2938)

BBS, form 138 (Rev. 8-99)

MODEL: 0180068-74595-039
FILE NAME: pw:\\ildot-pw.bentley.com:PWIDOT\Documents\IDOT Offices\Bureau of Bridges and Structures\Projects\0180068\CADD Plans\0180068-74595.dgn

DESIGNED - RYAN P. NEGANGARD	EXAMINED	ENGINEER OF BRIDGE DESIGN	DATE - 10/7/2025
CHECKED - DAVID H. RICHTER			
DRAWN - DENNIS A. POP	PASSED	ENGINEER OF BRIDGES AND STRUCTURES	REVISED -
CHECKED - R.P.N. / D.H.R.			REVISED -

STATE OF ILLINOIS
DEPARTMENT OF TRANSPORTATION

SOIL BORING LOGS
STRUCTURE NO. 018-0068

SHEET 39 OF 41 SHEETS

F.A.S. RTE.	SECTION	COUNTY	TOTAL SHEETS	SHEET NO.
1707	(FXX-B)B	CUMBERLAND	80	67
		CONTRACT NO. 74595		
	ILLINOIS	FED. AID PROJECT		

10/8/2025 7:23:22 AM

Illinois Department of Transportation
Division of Highways
Illinois Department of Transportation

SOIL BORING LOG

Date 6/1/20

ROUTE FAS 1707 DESCRIPTION US 40 over Embarras River LOGGED BY E. Sandschafer

SECTION (FXX-B)B LOCATION E 1/2, SEC. 10, TWP. 9N, RNG. 9E, 3rd PM,
Latitude N 39.237437, Longitude W 88.185699

COUNTY Cumberland DRILLING METHOD Hollow stem auger & split spoon HAMMER Auto ETR = 91.8% @ 57.4 bpm

STRUCT. NO. 018-0008 (Existing) 018-0068 (Proposed)
Station 1726+91.75

BORING NO. 4 (East Abutment)
Station 1729+48
Offset 7.5 ft RT
Ground Surface Elev. 535.43 ft

Surface Water Elev. 510.34 ft
Stream Bed Elev. 506.34 ft

Groundwater Elev.:
First Encounter 512.4 ft ▼
Upon Completion 512.4 ft ▽
After 72 Hrs. 512.4 ft ▽

Description	Elev.	DEPTH (ft)	BLOWS (/6")	UCS Qu (tsf)	MOIST (%)
4-3/8" Asphalt over 11" Concrete over 6" Aggregate	533.53				
Brown, CLAY					
Stiff, moist, brown mottled grey		-5	2 2 2	1.3 B	19
Stiff, moist, grey, SILTY CLAY	528.43		2 3 6	1.6 B	16
Very stiff, moist, grey, SANDY LOAM	524.93	-10	1 3 6	2.5 B	23
Stiff, moist, grey, SANDY CLAY LOAM	522.93		2 2 4	1.4 B	19
Medium, moist, grey, SANDY LOAM	520.93	-15	2 6 6	1.0 S	13
Medium, moist, grey, SILTY CLAY LOAM	518.43		1 3 3	0.9 B	17
	515.43	-20	1		
Medium, moist, grey, SILTY CLAY			1 2	0.7 B	28
Soft, moist, grey, SILTY LOAM	513.43		WH 1 1	0.3 B	26
Soft, moist, grey, SANDY LOAM	512.33				
Very soft, wet		-25	WH 1 1	0.2 B	24
Very loose, wet, grey, fine, SAND 6.1% passing #200.	508.43		1 WH 1		26
Coarse, gravelly, with 1" rock. 8.0% passing #200.		-30	2 7 9		11
Brown, with 1-1/4" rock. 10.4% passing #200.		-35	8 8 11		12
	495.43	-40	10		

The Unconfined Compressive Strength (UCS) Failure Mode is indicated by (B-Bulge, S-Shear, P-Penetrometer, E-Estimated)
The SPT (N value) is the sum of the last two blow values in each sampling zone (AASHTO T206), WH-Weight of Hammer,
NT-Not Tested.

BBS, form 137 (Rev. 8-99)

Illinois Department of Transportation
Division of Highways
Illinois Department of Transportation

SOIL BORING LOG

Date 6/1/20

ROUTE FAS 1707 DESCRIPTION US 40 over Embarras River LOGGED BY E. Sandschafer

SECTION (FXX-B)B LOCATION E 1/2, SEC. 10, TWP. 9N, RNG. 9E, 3rd PM,
Latitude N 39.237437, Longitude W 88.185699

COUNTY Cumberland DRILLING METHOD Hollow stem auger & split spoon HAMMER Auto ETR = 91.8% @ 57.4 bpm

STRUCT. NO. 018-0008 (Existing) 018-0068 (Proposed)
Station 1726+91.75

BORING NO. 4 (East Abutment)
Station 1729+48
Offset 7.5 ft RT
Ground Surface Elev. 535.43 ft

Surface Water Elev. 510.34 ft
Stream Bed Elev. 506.34 ft

Groundwater Elev.:
First Encounter 512.4 ft ▼
Upon Completion 512.4 ft ▽
After 72 Hrs. 512.4 ft ▽

Description	Elev.	DEPTH (ft)	BLOWS (/6")	UCS Qu (tsf)	MOIST (%)
Medium, moist, reddish-brown, fine SAND 9.7% passing #200.			13 16		17
5.8% passing #200.		-45	8 8 8		16
1.2% passing #200.		-50	8 9 17		23
		-55			
	475.43	-60	6		
Dense, moist, grey fine SAND 10.2% passing #200.			16 19		11
Benchmark: BM 202 - Permanent Survey Marker on wingwall at southeast corner of Structure No. 018-0008. End of Boring	470.93	-65			
		-70			
		-75			
		-80			

The Unconfined Compressive Strength (UCS) Failure Mode is indicated by (B-Bulge, S-Shear, P-Penetrometer, E-Estimated)
The SPT (N value) is the sum of the last two blow values in each sampling zone (AASHTO T206), WH-Weight of Hammer,
NT-Not Tested.

BBS, form 137 (Rev. 8-99)

MODEL: 0180068-74595-040
FILE NAME: pw:\\ildot-pw.bentley.com:PWIDOT\Documents\IDOT Offices\Bureau of Bridges and Structures\Projects\0180068\CADD Plans\0180068-74595.dgn

DESIGNED - RYAN P. NEGANGARD	EXAMINED	DATE - 10/7/2025	STATE OF ILLINOIS DEPARTMENT OF TRANSPORTATION
CHECKED - DAVID H. RICHTER	ENGINEER OF BRIDGE DESIGN		
DRAWN - DENNIS A. POP	PASSED	REVISED -	
CHECKED - R.P.N. / D.H.R.	ENGINEER OF BRIDGES AND STRUCTURES	REVISED -	

SOIL BORING LOGS
STRUCTURE NO. 018-0068

SHEET 40 OF 41 SHEETS

F.A.S. RTE.	SECTION	COUNTY	TOTAL SHEETS	SHEET NO.
1707	(FXX-B)B	CUMBERLAND	80	68
		CONTRACT NO. 74595		
		ILLINOIS	FED. AID PROJECT	

10/8/2025 7:24:00 AM

Illinois Department of Transportation
Division of Highways
Illinois Department of Transportation

SOIL BORING LOG

Page 1 of 2

Date 9/25/20

ROUTE FAS 1707 DESCRIPTION US 40 over Embarras River LOGGED BY E. Sandschafer

SECTION (FXX-B)B LOCATION E 1/2, SEC. 10, TWP. 9N, RNG. 9E, 3rd PM,
Latitude N 39.237677, Longitude W 88.185779

COUNTY Cumberland DRILLING METHOD Hollow stem auger & split spoon HAMMER Auto ETR = 91.8% @ 57.4 bpm

STRUCT. NO. 018-0008 (Existing)
018-0068 (Proposed)
Station 1726+91.75

BORING NO. 5 (East Abutment)
Station 1729+42
Offset 62.0 ft LT
Ground Surface Elev. 521.40 ft

Surface Water Elev. 510.34 ft
Stream Bed Elev. 506.34 ft

Groundwater Elev.:
First Encounter NA ft
Upon Completion NA ft
After ___ Hrs. NA ft

Description	DEPTH (ft)	BLOWS (/6")	UCS Qu (tsf)	MOIST (%)
No sampling - Boring advanced to determine top of rock elevation.	-5			
	-10			
	-15			
	501.40 -20			
No sampling - Boring advanced to determine top of rock elevation.	-25			
	-30			
	-35			
	481.40 -40			

The Unconfined Compressive Strength (UCS) Failure Mode is indicated by (B-Bulge, S-Shear, P-Penetrometer, E-Estimated)
The SPT (N value) is the sum of the last two blow values in each sampling zone (AASHTO T206), WH-Weight of Hammer, NT-Not Tested.

BBS, form 137 (Rev. 8-99)

Illinois Department of Transportation
Division of Highways
Illinois Department of Transportation

SOIL BORING LOG

Page 2 of 2

Date 9/25/20

ROUTE FAS 1707 DESCRIPTION US 40 over Embarras River LOGGED BY E. Sandschafer

SECTION (FXX-B)B LOCATION E 1/2, SEC. 10, TWP. 9N, RNG. 9E, 3rd PM,
Latitude N 39.237677, Longitude W 88.185779

COUNTY Cumberland DRILLING METHOD Hollow stem auger & split spoon HAMMER Auto ETR = 91.8% @ 57.4 bpm

STRUCT. NO. 018-0008 (Existing)
018-0068 (Proposed)
Station 1726+91.75

BORING NO. 5 (East Abutment)
Station 1729+42
Offset 62.0 ft LT
Ground Surface Elev. 521.40 ft

Surface Water Elev. 510.34 ft
Stream Bed Elev. 506.34 ft

Groundwater Elev.:
First Encounter NA ft
Upon Completion NA ft
After ___ Hrs. NA ft

Description	DEPTH (ft)	BLOWS (/6")	UCS Qu (tsf)	MOIST (%)
No sampling - Boring advanced to determine top of rock elevation.	-45			
	473.90			
Very dense, grey, pokerchipped, silty, clay, SHALE		32 50 3-9/16" 50 2")	9	
	471.90			
Benchmark: BM 202 - Permanent Survey Marker on wingwall at southeast corner of Structure No. 018-0008. End of Boring	-50			
	-55			
	-60			

The Unconfined Compressive Strength (UCS) Failure Mode is indicated by (B-Bulge, S-Shear, P-Penetrometer, E-Estimated)
The SPT (N value) is the sum of the last two blow values in each sampling zone (AASHTO T206), WH-Weight of Hammer, NT-Not Tested.

BBS, form 137 (Rev. 8-99)

MODEL: 0180068-74595-041
FILE NAME: pw:\\ildot-pw.bentley.com:PWIDOT\Documents\IDOT Offices\Bureau of Bridges and Structures\Projects\0180068\CADD Plans\0180068-74595.dgn
10/8/2025 7:24:36 AM

DESIGNED - RYAN P. NEGANGARD	EXAMINED	DATE - 10/7/2025	STATE OF ILLINOIS DEPARTMENT OF TRANSPORTATION
CHECKED - DAVID H. RICHTER	ENGINEER OF BRIDGE DESIGN		
DRAWN - DENNIS A. POP	PASSED	REVISED -	
CHECKED - R.P.N. / D.H.R.	ENGINEER OF BRIDGES AND STRUCTURES	REVISED -	

SOIL BORING LOGS
STRUCTURE NO. 018-0068

SHEET 41 OF 41 SHEETS

F.A.S. RTE.	SECTION	COUNTY	TOTAL SHEETS	SHEET NO.
1707	(FXX-B)B	CUMBERLAND	80	69
		CONTRACT NO. 74595		
		ILLINOIS	FED. AID PROJECT	

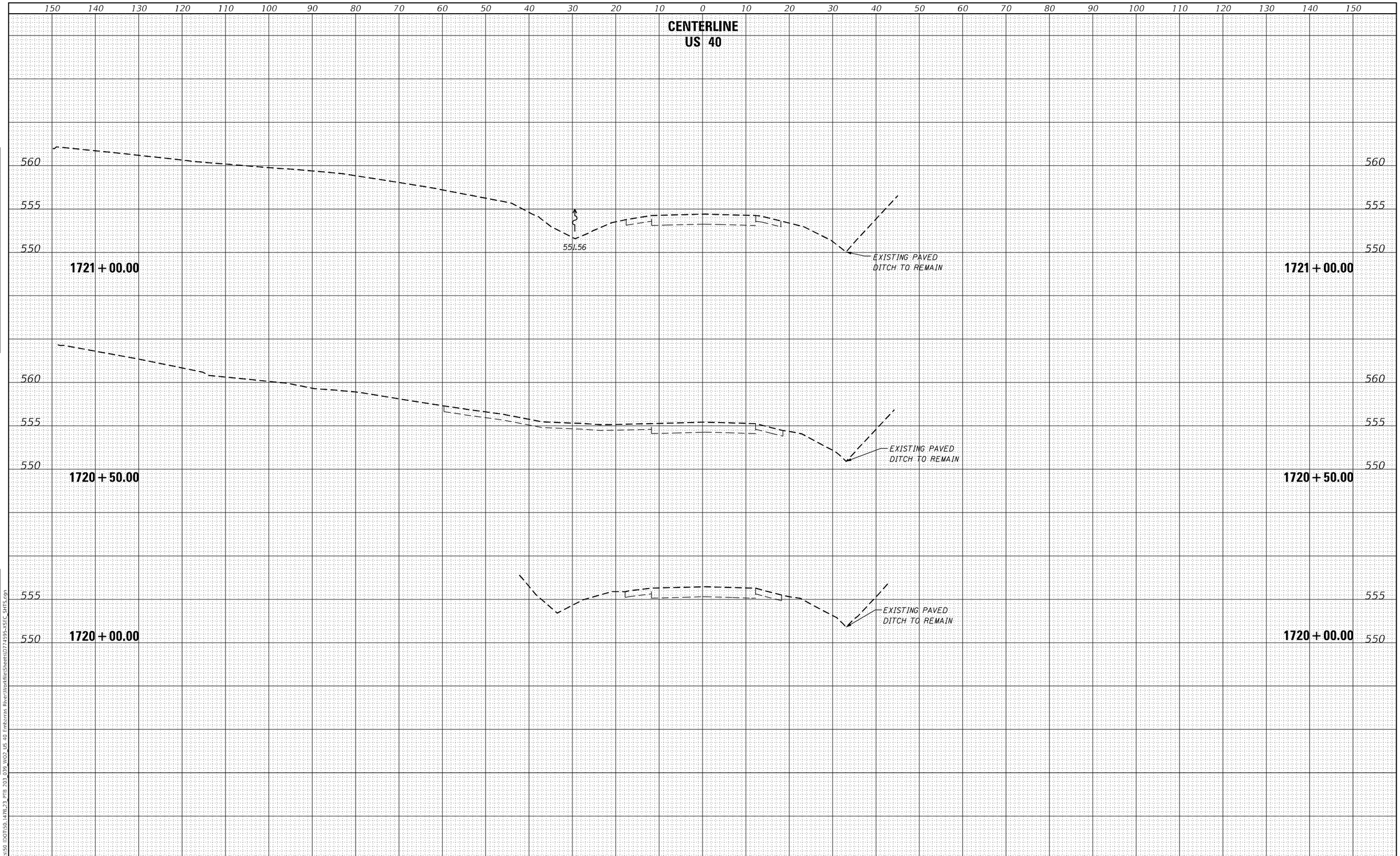

FINAL SURVEY		BY	DATE
NOTE BOOK	SURVEYED		
	PLOTTED		
	TEMPLATE		
	AREAS		
	AREAS CHECKED		

ORIGINAL SURVEY		BY	DATE
NOTE BOOK	SURVEYED		
	PLOTTED		
	TEMPLATE		
	AREAS		
	AREAS CHECKED		

MODEL: Default
FILE NAME: F:\Projects\50 IDOT\50.147B.23_PTB 203 039 WO2 US 40 Embarras River\Workfile\Sheets\D774595-XSEC_SHTS.dgn

HERMANN & Associates, LLC
Civil Engineers

USER NAME = Mohammed	DESIGNED - AMH	REVISED -
	DRAWN - AMH	REVISED -
PLOT SCALE = 20.000 ' / in.	CHECKED - JAS	REVISED -
PLOT DATE = 8/7/2025	DATE - 4/25/2025	REVISED -

STATE OF ILLINOIS
DEPARTMENT OF TRANSPORTATION

CROSS SECTION SHEETS

SHEET 1 OF 11 SHEETS STA. 1720+00.00 TO STA. 1721+00.00

F.A.S. RTE.	SECTION	COUNTY	TOTAL SHEETS	SHEET NO.
1707	(FXX-B)B	CUMBERLAND	80	70

CONTRACT NO. 74595

ILLINOIS | FED. AID PROJECT

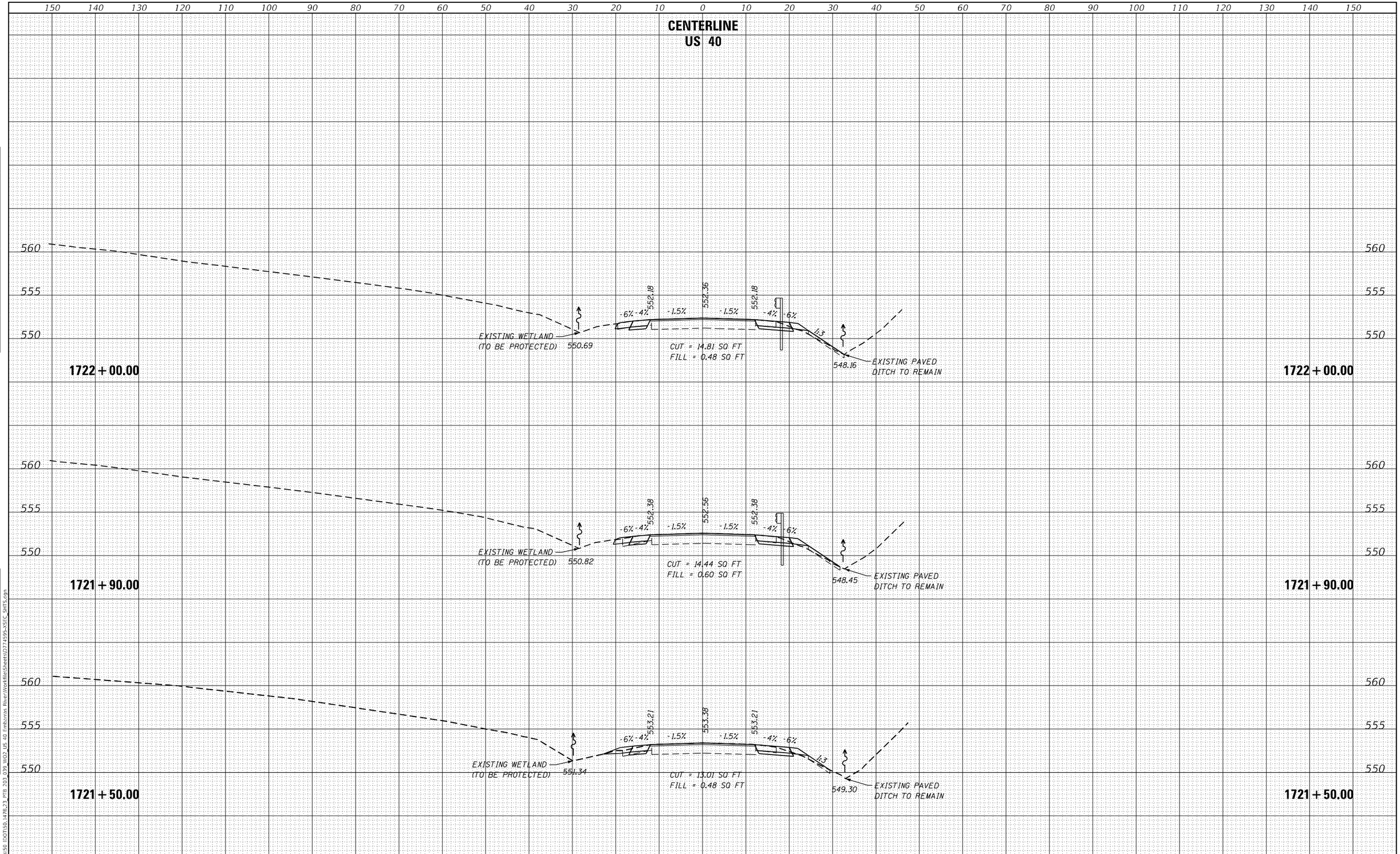

FINAL SURVEY	BY	DATE
SURVEYED		
PLOTTED		
TEMPLATE		
AREAS		
AREAS CHECKED		
NOTE BOOK		
NO.		

ORIGINAL SURVEY	BY	DATE
SURVEYED		
PLOTTED		
TEMPLATE		
AREAS		
AREAS CHECKED		
NOTE BOOK		
NO.		

MODEL: Default
FILE NAME: F:\Projects\90 IDOT\50_I47&23_PTB 203 039 WO2_US 40 Emborras River\Workfile\Sheets\0774595-xSEC_SHTS.dgn

HERMANN & Associates, LLC
Civil Engineers

USER NAME = Mohammed	DESIGNED - AMH	REVISED -
	DRAWN - AMH	REVISED -
PLOT SCALE = 20.000 ' / in.	CHECKED - JAS	REVISED -
PLOT DATE = 8/7/2025	DATE - 4/25/2025	REVISED -

STATE OF ILLINOIS
DEPARTMENT OF TRANSPORTATION

CROSS SECTION SHEETS

SHEET 2 OF 11 SHEETS STA. 1721+50.00 TO STA. 1722+00.00

F.A.S. RTE.	SECTION	COUNTY	TOTAL SHEETS	SHEET NO.
1707	(FXX-B)B	CUMBERLAND	80	71

CONTRACT NO. 74595

ILLINOIS | FED. AID PROJECT

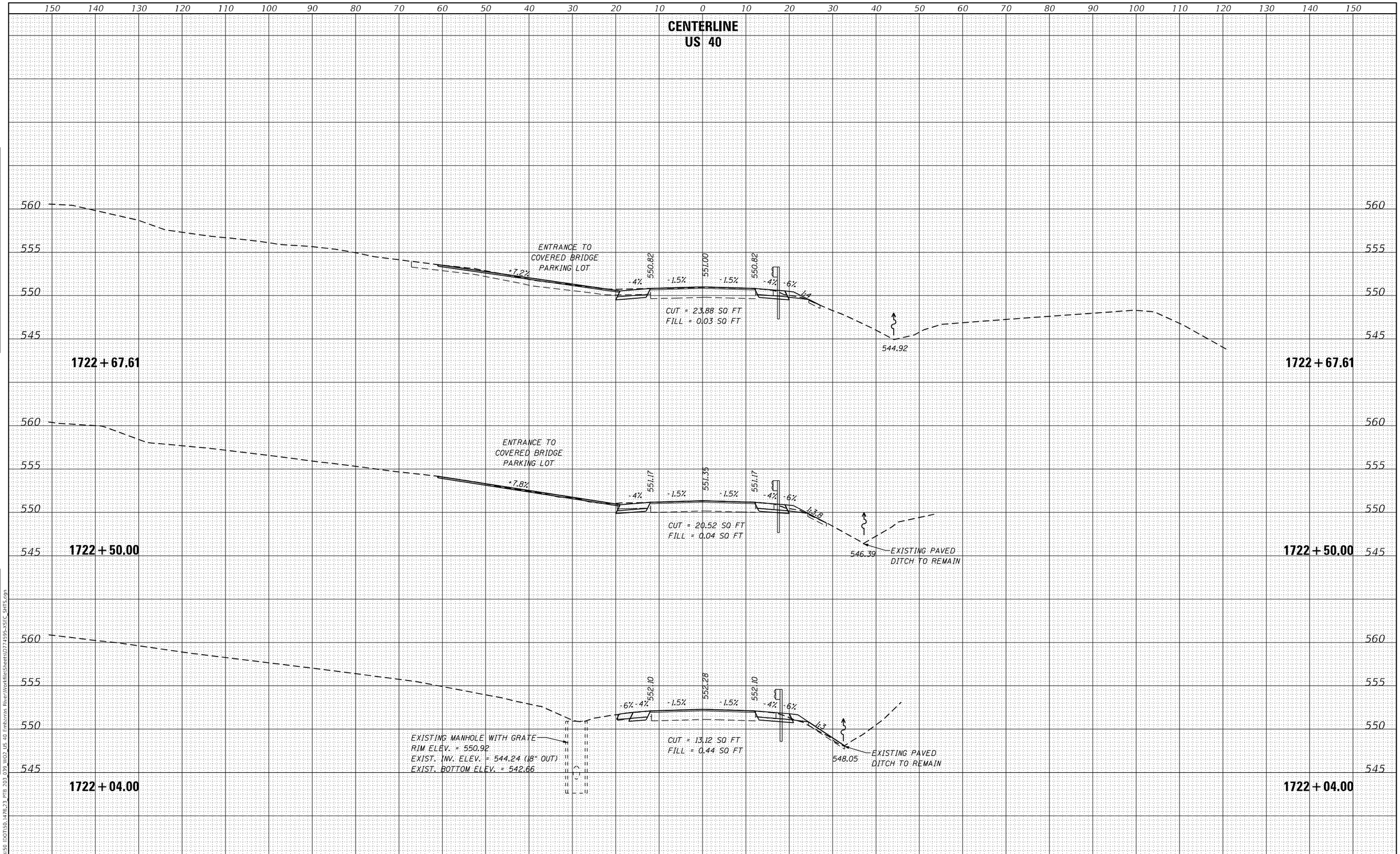

FINAL SURVEY		BY	DATE
NOTE BOOK	SURVEYED		
	PLOTTED		
	TEMPLATE		
	AREAS		
	AREAS CHECKED		
NO.			

ORIGINAL SURVEY		BY	DATE
NOTE BOOK	SURVEYED		
	PLOTTED		
	TEMPLATE		
	AREAS		
	AREAS CHECKED		
NO.			

MODEL: Default
FILE NAME: F:\Projects\50 IDOT\50_J47B_23_PTB_203_039_WO2_US_40_Emborras River\Workfile\Sheets\0774595-xSEC_SHTS.dgn

HERMANN & Associates, LLC
Civil Engineers

USER NAME = Mohammed	DESIGNED - AMH	REVISED -
	DRAWN - AMH	REVISED -
PLOT SCALE = 20.000 ' / in.	CHECKED - JAS	REVISED -
PLOT DATE = 8/7/2025	DATE - 4/25/2025	REVISED -

STATE OF ILLINOIS
DEPARTMENT OF TRANSPORTATION

CROSS SECTION SHEETS

SHEET 3 OF 11 SHEETS STA. 1722+04.00 TO STA. 1722+67.61

F.A.S. RTE.	SECTION	COUNTY	TOTAL SHEETS	SHEET NO.
1707	(FXX-B)B	CUMBERLAND	80	72
		CONTRACT NO. 74595		
		ILLINOIS	FED. AID PROJECT	

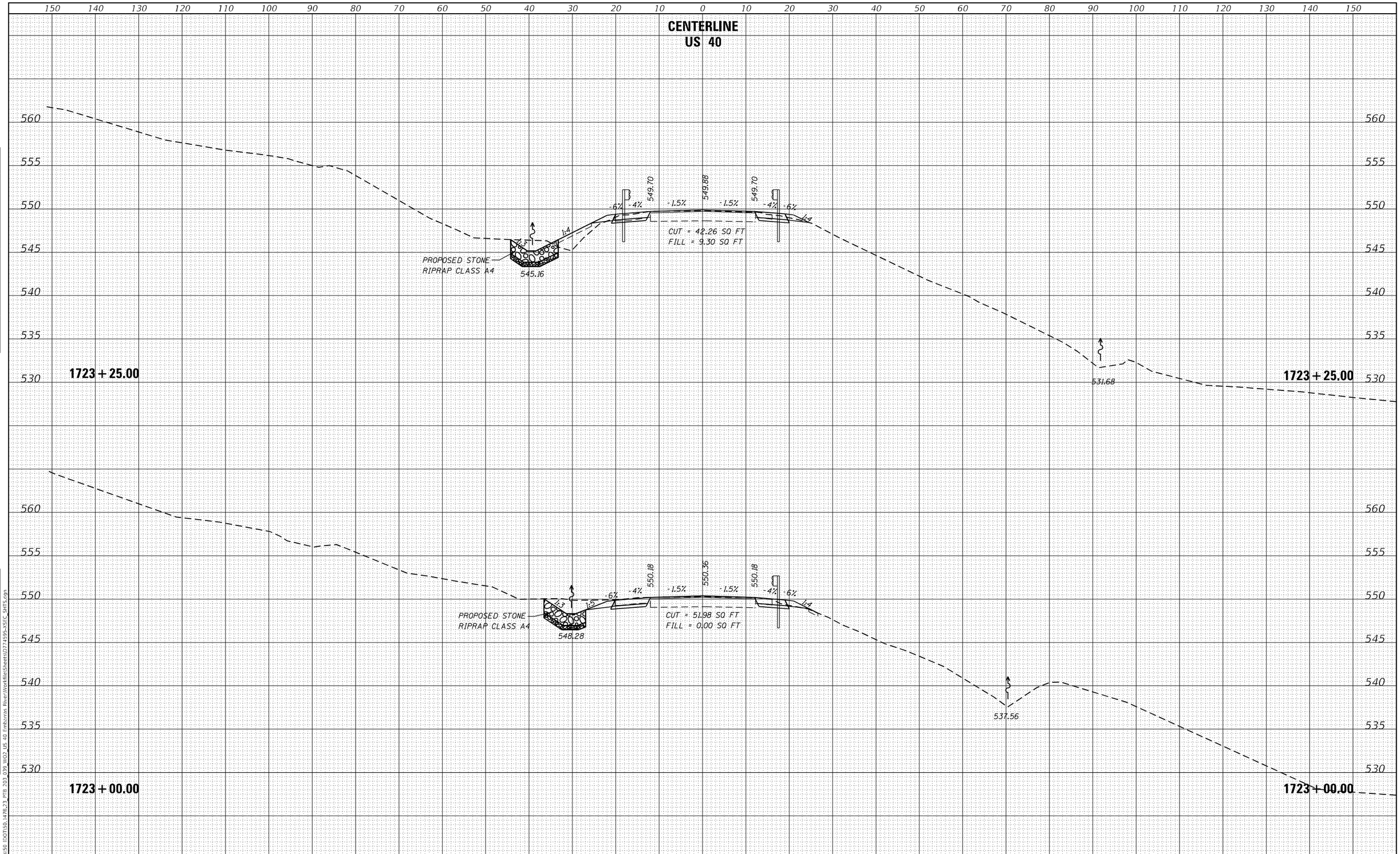

FINAL SURVEY	BY	DATE
SURVEYED		
PLOTTED		
TEMPLATE		
AREAS		
AREAS CHECKED		
NOTE BOOK		
NO.		

ORIGINAL SURVEY	BY	DATE
SURVEYED		
PLOTTED		
TEMPLATE		
AREAS		
AREAS CHECKED		
NOTE BOOK		
NO.		

MODEL: Default
FILE NAME: F:\Projects\50 IDOT\50.1478.23 PTB 203 039 WO2 US 40 Embarras River\Workfile\Sheets\0774595-XSEC_SHTS.dgn

HERMANN & Associates, LLC
Civil Engineers

USER NAME = Mohammed	DESIGNED - AMH	REVISED -	
	DRAWN - AMH	REVISED -	
PLOT SCALE = 20.000 ' / in.	CHECKED - JAS	REVISED -	
PLOT DATE = 8/7/2025	DATE - 4/25/2025	REVISED -	

STATE OF ILLINOIS
DEPARTMENT OF TRANSPORTATION

CROSS SECTION SHEETS

SHEET 4 OF 10 SHEETS STA. 1723+00.00 TO STA. 1723+25.00

F.A.S. RTE.	SECTION	COUNTY	TOTAL SHEETS	SHEET NO.
1707	(FXX-B)B	CUMBERLAND	80	73

CONTRACT NO. 74595

ILLINOIS FED. AID PROJECT

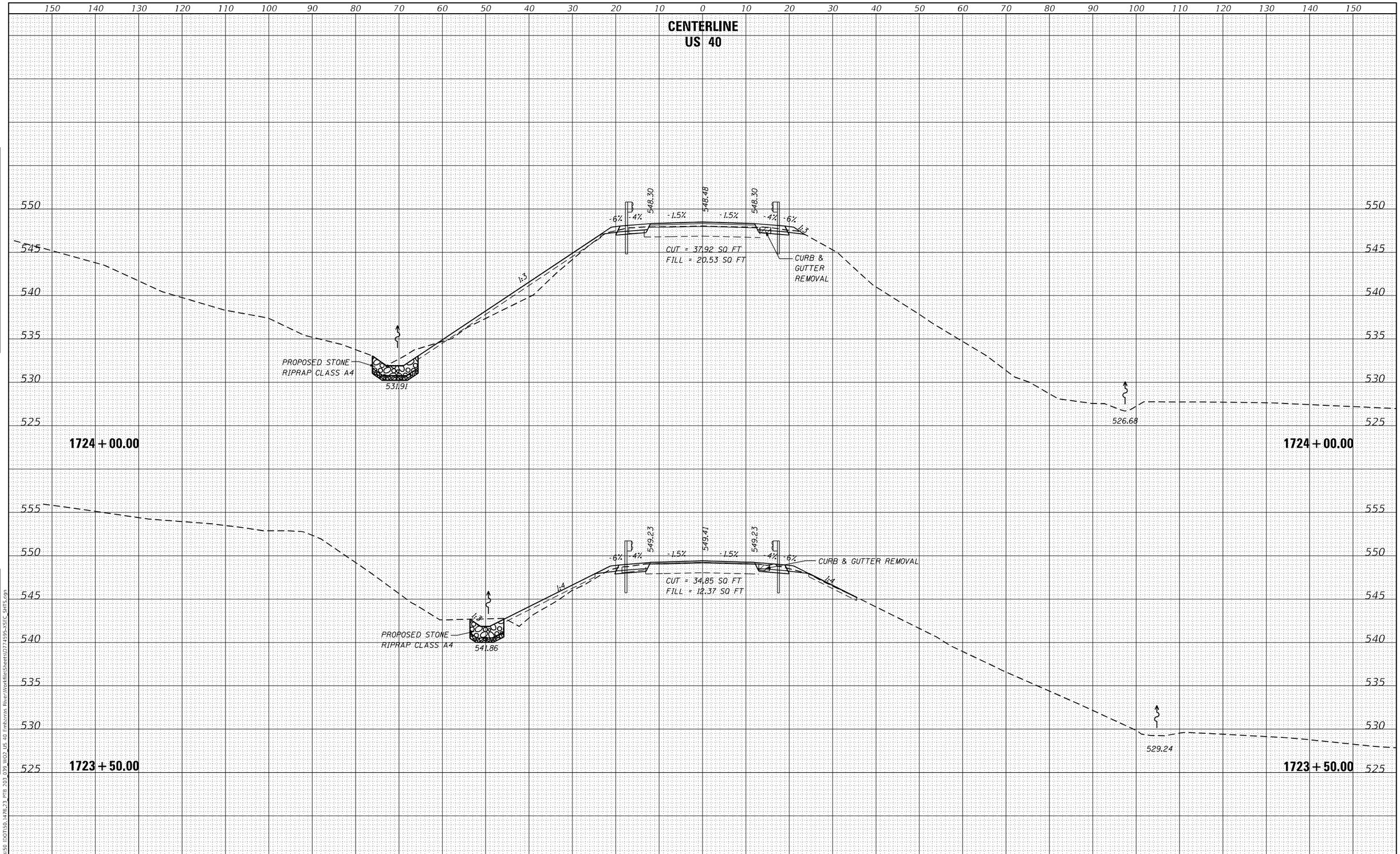

FINAL SURVEY	BY	DATE
SURVEYED		
PLOTTED		
TEMPLATE		
AREAS		
AREAS CHECKED		
NOTE BOOK		
NO.		

ORIGINAL SURVEY	BY	DATE
SURVEYED		
PLOTTED		
TEMPLATE		
AREAS		
AREAS CHECKED		
NOTE BOOK		
NO.		

MODEL: Default
FILE NAME: F:\Projects\50 IDOT\50.1478.23 PTB 203 039 WO2 US 40 Emborras River\Workfile\Sheets\0774595-XSEC_SHTS.dgn

HERMANN & Associates, LLC
Civil Engineers

USER NAME = Mohammed	DESIGNED - AMH	REVISED -	
	DRAWN - AMH	REVISED -	
PLOT SCALE = 20.000 ' / in.	CHECKED - JAS	REVISED -	
PLOT DATE = 8/7/2025	DATE - 4/25/2025	REVISED -	

STATE OF ILLINOIS
DEPARTMENT OF TRANSPORTATION

CROSS SECTION SHEETS

SHEET 5 OF 11 SHEETS STA. 1723+50.00 TO STA. 1724+00.00

F.A.S. RTE.	SECTION	COUNTY	TOTAL SHEETS	SHEET NO.
1707	(FXX-B)B	CUMBERLAND	80	74

CONTRACT NO. 74595

ILLINOIS FED. AID PROJECT

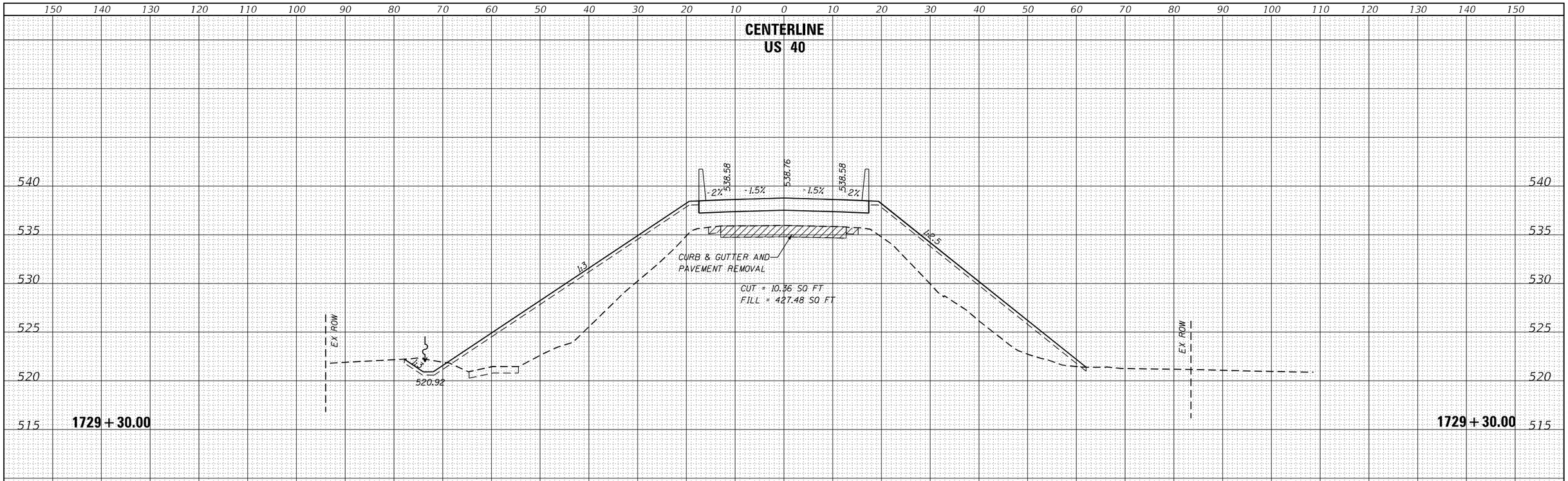

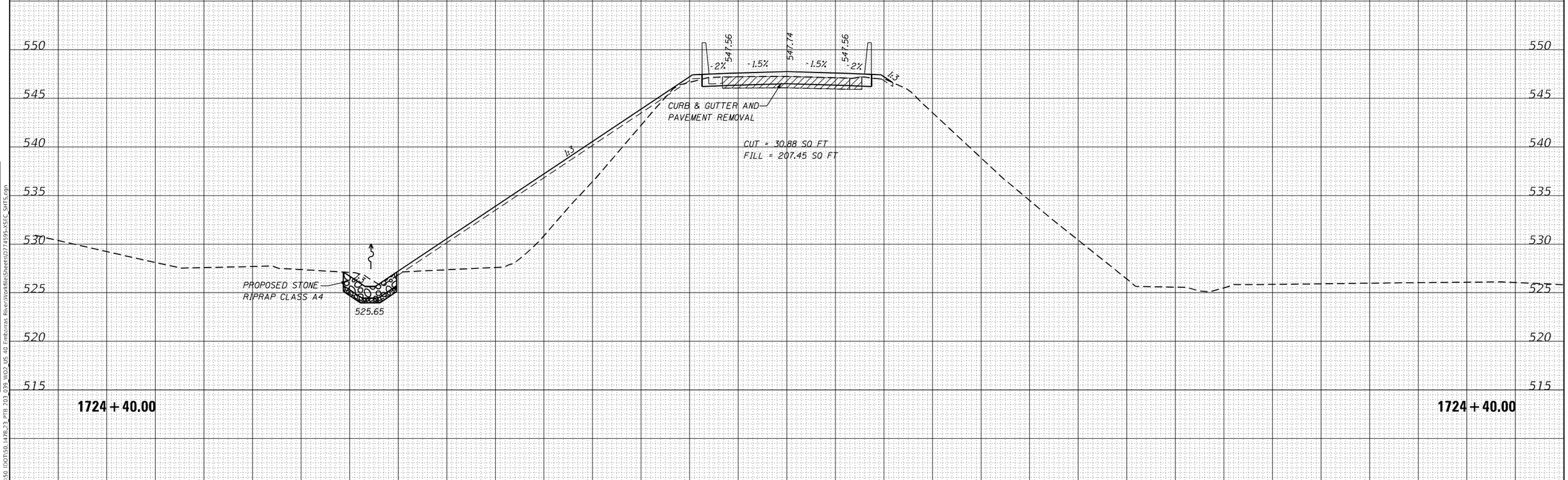

FINAL SURVEY	BY	DATE
SURVEYED		
PLOTTED		
TEMPLATE		
AREAS		
AREAS CHECKED		
NOTE BOOK		
NO.		

ORIGINAL SURVEY	BY	DATE
SURVEYED		
PLOTTED		
TEMPLATE		
AREAS		
AREAS CHECKED		
NOTE BOOK		
NO.		

MODEL: Default
FILE NAME: F:\Projects\50 IDOT\50_J47B_23_PTB_203_039_W02_US_40_Emborras River\Workfile\Sheets\D774595-xSEC_SHTS.dgn

HERMANN & Associates, LLC
Civil Engineers

USER NAME = Mohammed	DESIGNED - AMH	REVISED -
	DRAWN - AMH	REVISED -
PLOT SCALE = 20.000 ' / in.	CHECKED - JAS	REVISED -
PLOT DATE = 8/7/2025	DATE - 4/25/2025	REVISED -

STATE OF ILLINOIS
DEPARTMENT OF TRANSPORTATION

CROSS SECTION SHEETS

SHEET 6 OF 11 SHEETS STA. 1724+40.00 TO STA. 1729+30.00

F.A.S. RTE.	SECTION	COUNTY	TOTAL SHEETS	SHEET NO.
1707	(FXX-B)B	CUMBERLAND	80	75
		CONTRACT NO. 74595		
		ILLINOIS	FED. AID PROJECT	

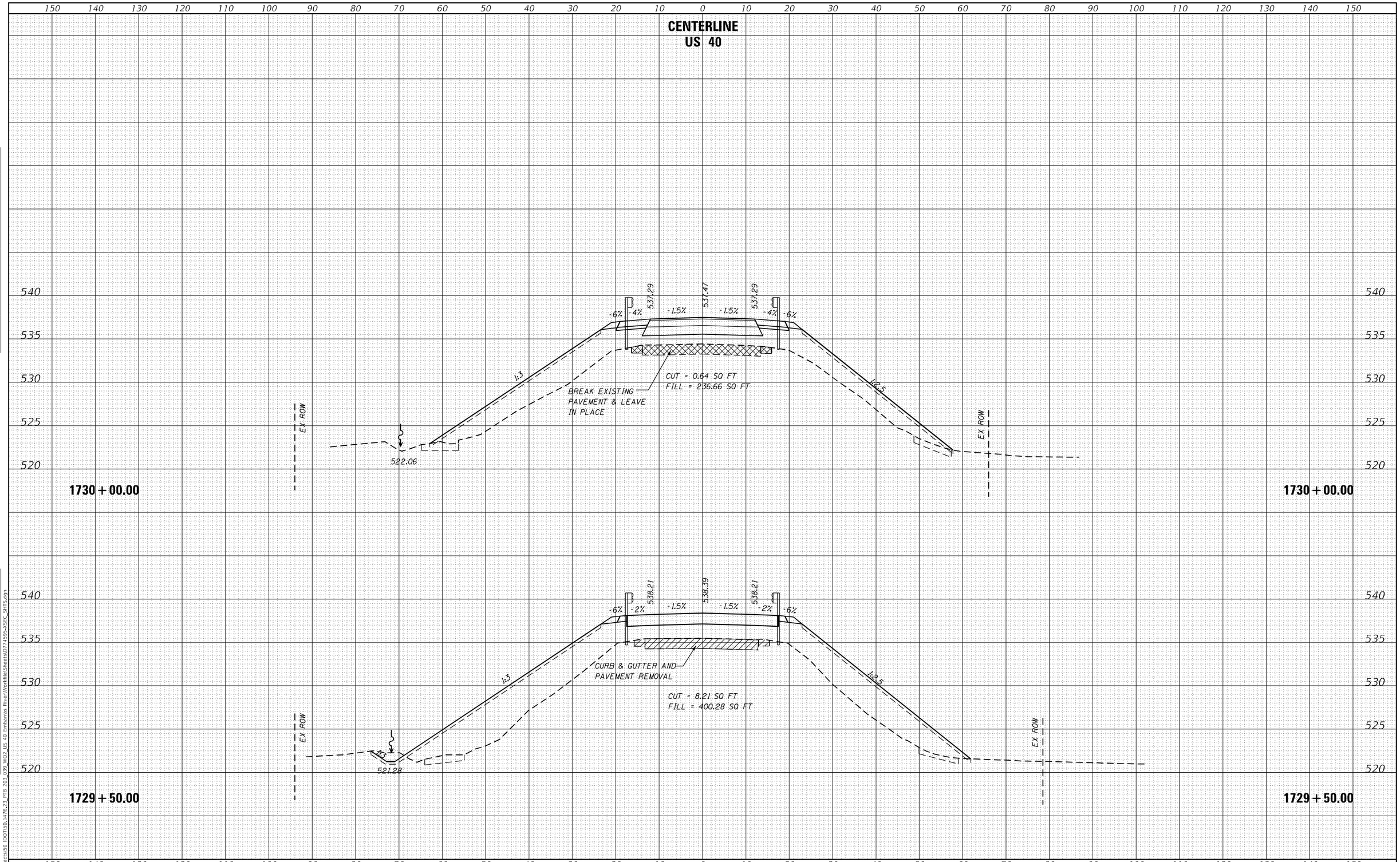

FINAL SURVEY		BY	DATE
SURVEYED			
PLOTTED			
TEMPLATE			
AREAS			
AREAS CHECKED			
NOTE BOOK			
NO.			

ORIGINAL SURVEY		BY	DATE
SURVEYED			
PLOTTED			
TEMPLATE			
AREAS			
AREAS CHECKED			
NOTE BOOK			
NO.			

MODEL: Default
FILE NAME: F:\Projects\50 IDOT\50_147B_23_PTB_203_039 WO2_US 40 Embarras River\Workfile\Sheets\D774595-XSEC_SHTS.dgn

HERMANN & Associates, LLC
Civil Engineers

USER NAME = Mohammed	DESIGNED - AMH	REVISED -	
	DRAWN - AMH	REVISED -	
PLOT SCALE = 20.000 ' / in.	CHECKED - JAS	REVISED -	
PLOT DATE = 8/7/2025	DATE - 4/25/2025	REVISED -	

STATE OF ILLINOIS
DEPARTMENT OF TRANSPORTATION

CROSS SECTION SHEETS

SCALE: | SHEET 7 OF 10 SHEETS | STA. 1729+50.00 TO STA. 1730+00.00

F.A.S. RTE.	SECTION	COUNTY	TOTAL SHEETS	SHEET NO.
1707	(FXX-B)B	CUMBERLAND	80	76

CONTRACT NO. 74595

ILLINOIS | FED. AID PROJECT

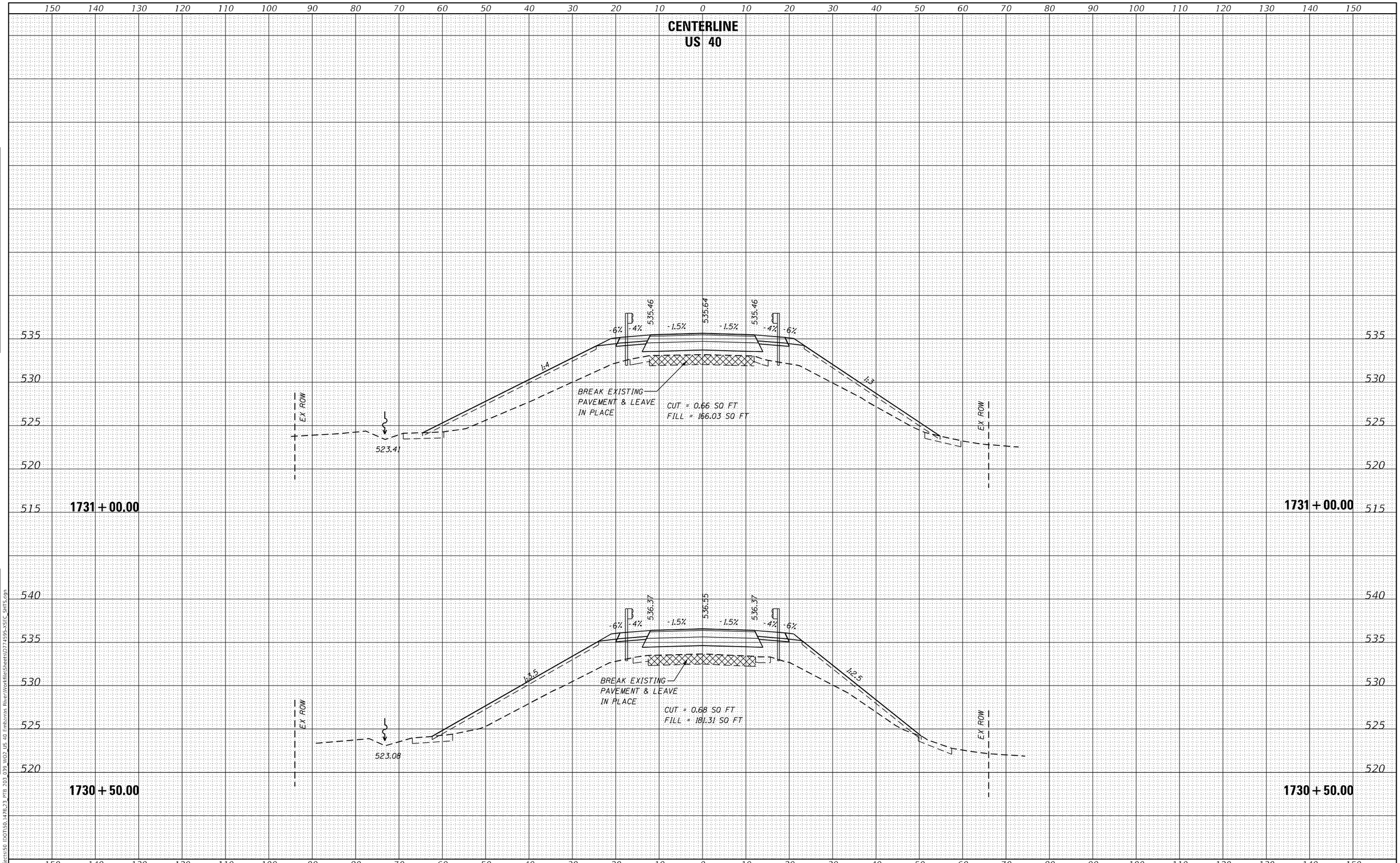

FINAL SURVEY	BY	DATE
SURVEYED		
PLOTTED		
TEMPLATE		
AREAS		
AREAS CHECKED		
NOTE BOOK		
NO.		

ORIGINAL SURVEY	BY	DATE
SURVEYED		
PLOTTED		
TEMPLATE		
AREAS		
AREAS CHECKED		
NOTE BOOK		
NO.		

US 40 Embarras River\Workfile\Sheets\D774595-XSEC_SHTS.dgn

MODEL: Default
FILE NAME: F:\Projects\50 IDOT\50_147B23_PTB 203 039 WO2

HERMANN & Associates, LLC
Civil Engineers

USER NAME = Mohammed	DESIGNED - AMH	REVISED -	
	DRAWN - AMH	REVISED -	
PLOT SCALE = 20.000 ' / in.	CHECKED - JAS	REVISED -	
PLOT DATE = 8/7/2025	DATE - 4/25/2025	REVISED -	

STATE OF ILLINOIS
DEPARTMENT OF TRANSPORTATION

CROSS SECTION SHEETS

SHEET 8 OF 11 SHEETS | STA. 1730+50.00 TO STA. 1731+00.00

F.A.S. RTE.	SECTION	COUNTY	TOTAL SHEETS	SHEET NO.
1707	(FXX-B)B	CUMBERLAND	80	77

CONTRACT NO. 74595

ILLINOIS | FED. AID PROJECT

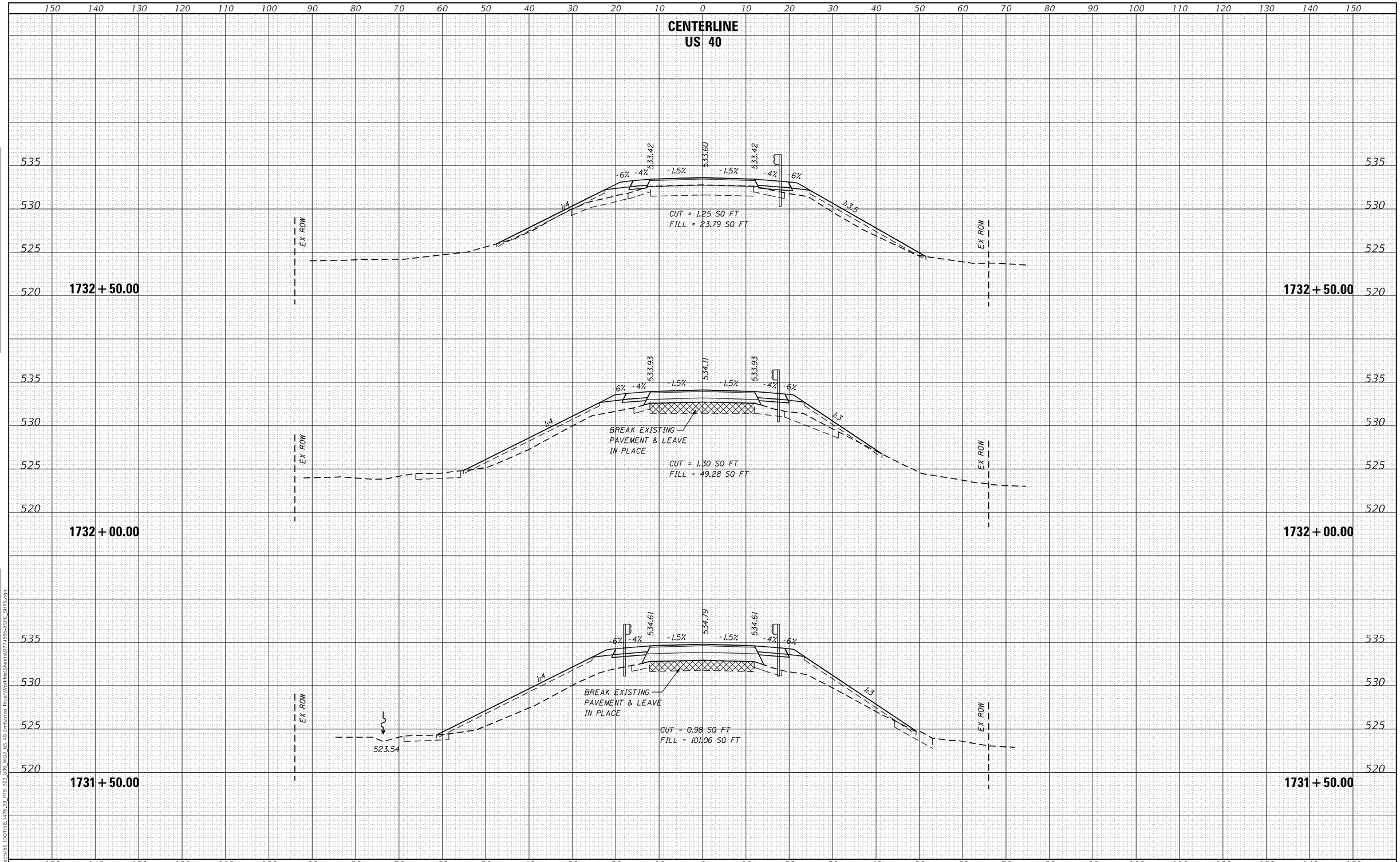

FINAL SURVEY	BY	DATE
SURVEYED		
PLOTTED		
TEMPLATE		
AREAS		
AREAS CHECKED		
NOTE BOOK		
NO.		

ORIGINAL SURVEY	BY	DATE
SURVEYED		
PLOTTED		
TEMPLATE		
AREAS		
AREAS CHECKED		
NOTE BOOK		
NO.		

MODEL: Default
FILE NAME: F:\Projects\50 IDOT\50_147B_23_PTB_203_039_WO2_US_40 Embarras River\Workfile\Sheets\D774595-XSEC_SHTS.dgn

HERMANN & Associates, LLC
Civil Engineers

USER NAME = Mohammed	DESIGNED - AMH	REVISED -	
	DRAWN - AMH	REVISED -	
PLOT SCALE = 20.000 ' / in.	CHECKED - JAS	REVISED -	
PLOT DATE = 8/7/2025	DATE - 4/25/2025	REVISED -	

STATE OF ILLINOIS
DEPARTMENT OF TRANSPORTATION

CROSS SECTION SHEETS

SHEET 9 OF 11 SHEETS | STA. 1731+50.00 TO STA. 1732+50.00

F.A.S. RTE.	SECTION	COUNTY	TOTAL SHEETS	SHEET NO.
1707	(FXX-B)B	CUMBERLAND	80	78

CONTRACT NO. 74595

ILLINOIS | FED. AID PROJECT

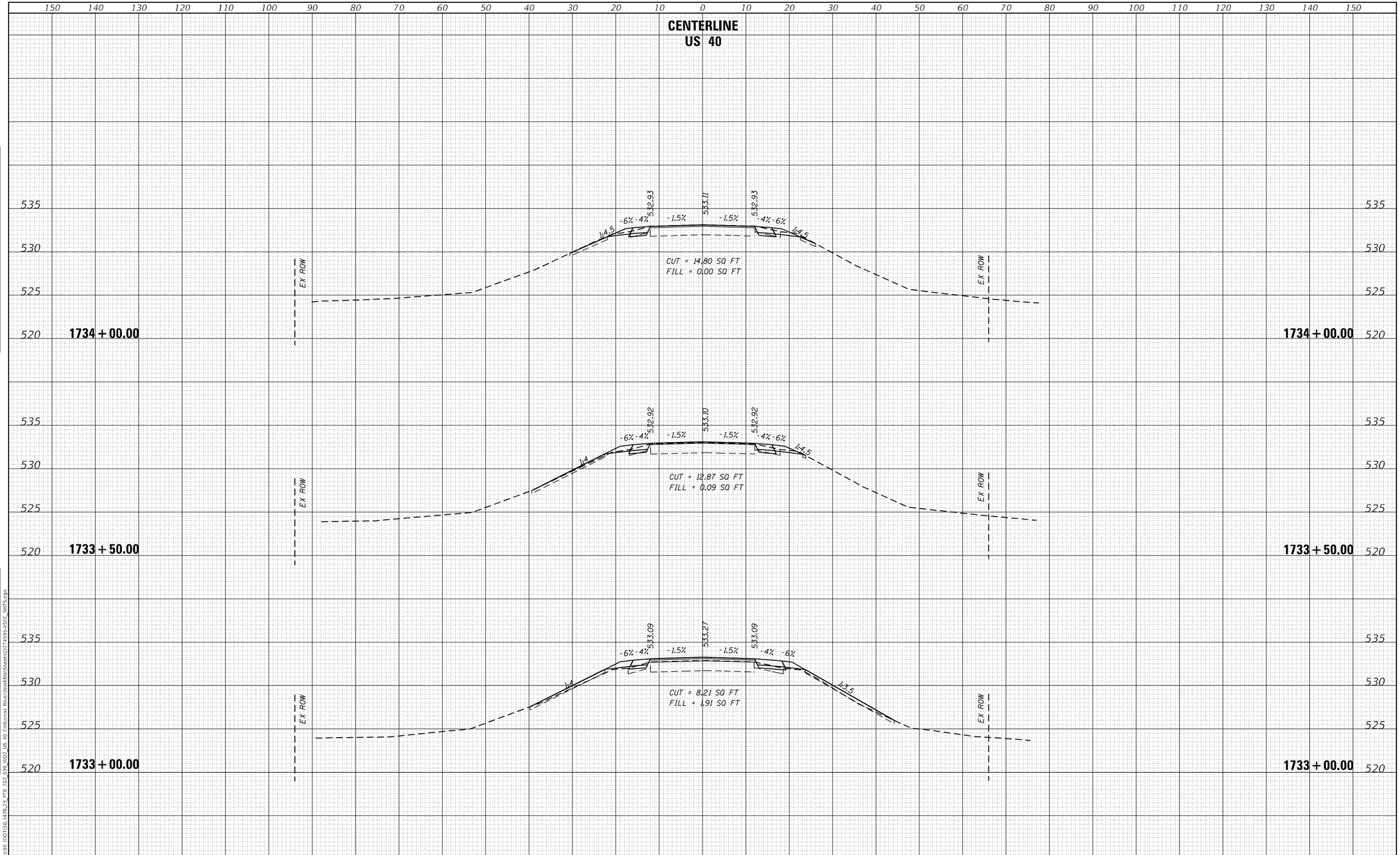

FINAL SURVEY	BY	DATE
SURVEYED		
PLOTTED		
TEMPLATE		
AREAS		
AREAS CHECKED		
NOTE BOOK		
NO.		

ORIGINAL SURVEY	BY	DATE
SURVEYED		
PLOTTED		
TEMPLATE		
AREAS		
AREAS CHECKED		
NOTE BOOK		
NO.		

MODEL: Default
FILE NAME: F:\Projects\50 IDOT\50.1478.23 PTB 203 039 WO2 US 40 Embarras River\Workfile\Sheets\0774595-XSEC SHTS.dgn

HERMANN & Associates, LLC
Civil Engineers

USER NAME = Mohammed	DESIGNED - AMH	REVISED -	
	DRAWN - AMH	REVISED -	
PLOT SCALE = 20.000 ' / in.	CHECKED - JAS	REVISED -	
PLOT DATE = 8/8/2025	DATE - 4/25/2025	REVISED -	

STATE OF ILLINOIS
DEPARTMENT OF TRANSPORTATION

CROSS SECTION SHEETS

SHEET 10 OF 11 SHEETS STA. 1733+00.00 TO STA. 1734+00.00

F.A.S. RTE.	SECTION	COUNTY	TOTAL SHEETS	SHEET NO.
1707	(FXX-B)B	CUMBERLAND	80	79
		CONTRACT NO. 74595		
		ILLINOIS	FED. AID PROJECT	

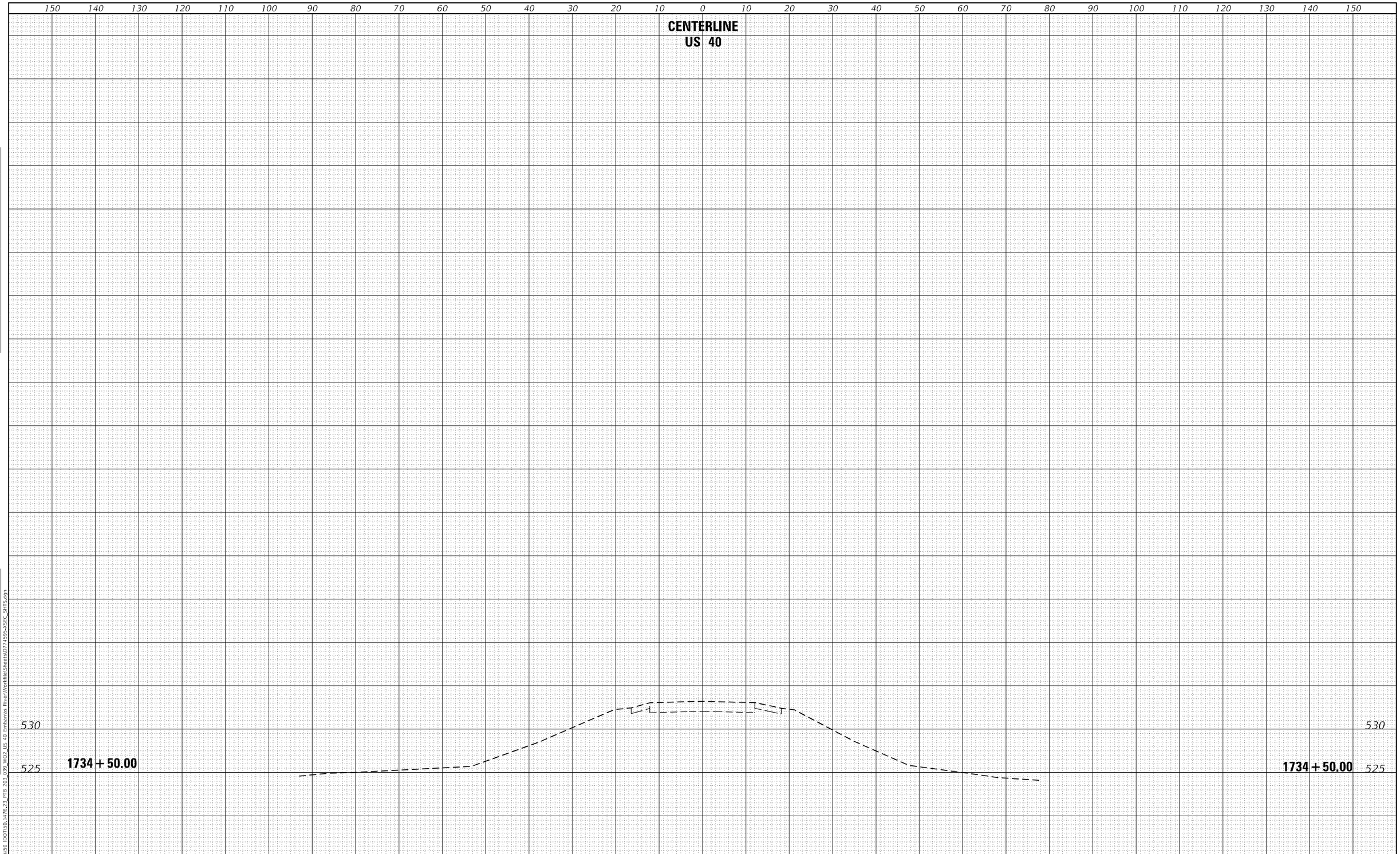

FINAL SURVEY		BY	DATE
	SURVEYED		
	PLOTTED		
NOTE BOOK	TEMPLATE		
	AREAS		
NO.	AREAS CHECKED		

ORIGINAL SURVEY		BY	DATE
	SURVEYED		
	PLOTTED		
NOTE BOOK	TEMPLATE		
	AREAS		
NO.	AREAS CHECKED		

MODEL: Default
FILE NAME: F:\Projects\50 IDOT\50.1478.23 PTB 203 039 WO2 US 40 Emborras River\Workfile\Sheets\0774595-XSEC_SHTS.dgn

HERMANN & Associates, LLC
Civil Engineers

USER NAME = Mohammed	DESIGNED - AMH	REVISED -	
	DRAWN - AMH	REVISED -	
PLOT SCALE = 20.000 ' / in.	CHECKED - JAS	REVISED -	
PLOT DATE = 8/7/2025	DATE - 4/25/2025	REVISED -	

STATE OF ILLINOIS
DEPARTMENT OF TRANSPORTATION

CROSS SECTION SHEETS

SHEET 11 OF 11 SHEETS STA. 1734+50.00 TO STA.

F.A.S. RTE.	SECTION	COUNTY	TOTAL SHEETS	SHEET NO.
1707	(FXX-B)B	CUMBERLAND	80	80
		CONTRACT NO. 74595		
		ILLINOIS	FED. AID PROJECT	