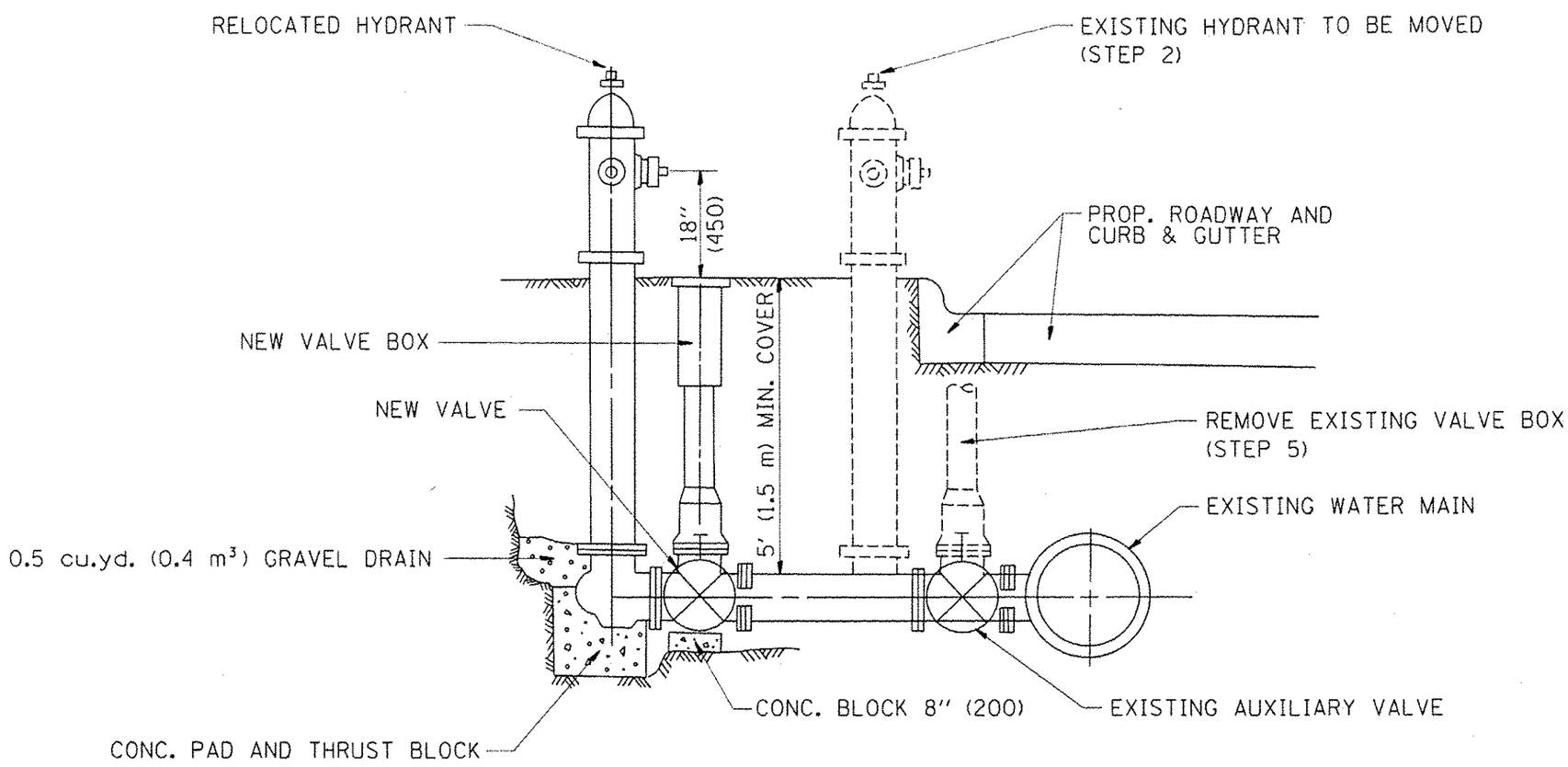

SEQUENCE OF CONSTRUCTION:

1. CLOSE EXISTING VALVE.
2. REMOVE EXISTING HYDRANT.
3. INSTALL HYDRANT EXTENSION AND NEW VALVE.
4. RELOCATE EXISTING HYDRANT.
5. OPEN EXISTING VALVE, REMOVE BOX.
6. BACKFILL.
7. FLUSH AND TEST FOR CHLORIDE RESIDUAL AND PROVIDE TEST.

ALL WORK TO BE DONE IN ACCORDANCE WITH ARTICLE 564 OF THE STANDARD SPECIFICATIONS. NEW VALVE AND BOX SHALL BE SAME MAKE AND MODEL AS EXISTING.

FIRE HYDRANT TO BE MOVED

ALL DIMENSIONS ARE IN INCHES (MILLIMETERS) UNLESS OTHERWISE SHOWN.

FILE NAME = c:\pw_work\pwidot\galban\jr\d0364020\D1std.dgn	USER NAME = galban\jr	DESIGNED -	REVISED - R. SHAH 09-09-94	STATE OF ILLINOIS DEPARTMENT OF TRANSPORTATION	FIRE HYDRANT TO BE MOVED			F.A.P. RTE.	SECTION	COUNTY	TOTAL SHEETS	SHEET NO.
		DRAWN -	REVISED - R. SHAH 10-25-94					345	TY-WRS	COOK	97	71A
	PLOT SCALE = 100.0000 ' / in.	CHECKED -	REVISED -					BD-36		CONTRACT NO. 60N18		
	PLOT DATE = 4/12/2013	DATE -	REVISED -		SCALE: NONE	SHEET NO. 1 OF 1 SHEETS	STA. TO STA.	FED. ROAD DIST. NO. 1	ILLINOIS	FED. AID PROJECT		