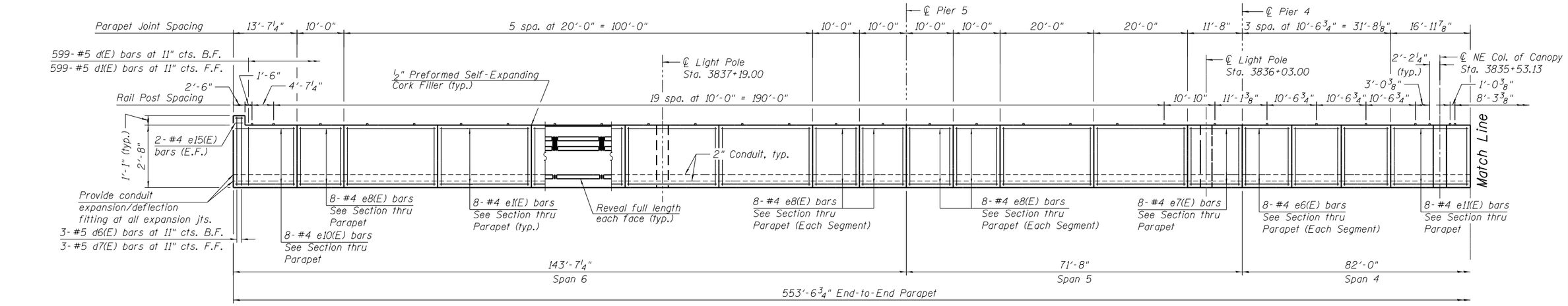


## INSIDE ELEVATION OF EAST PARAPET

(Looking East)

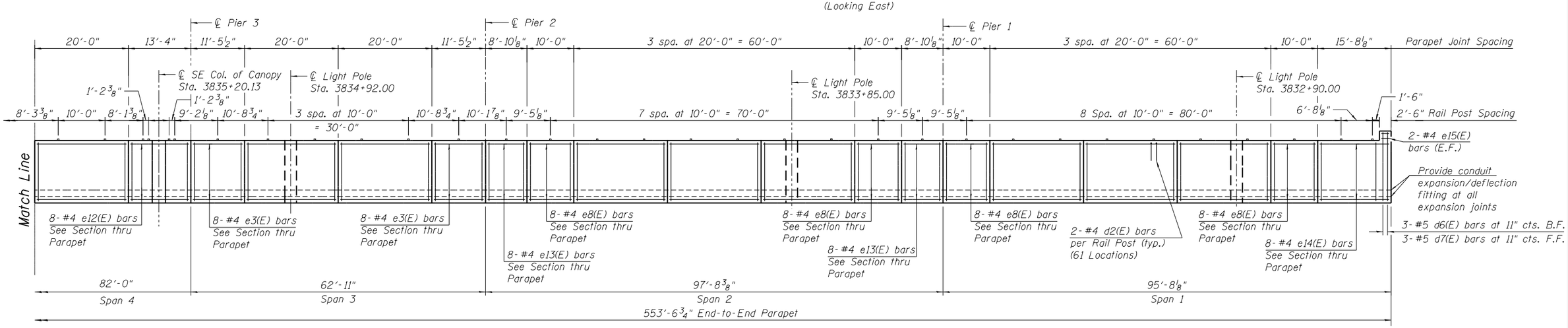


## INSIDE ELEVATION OF EAST PARAPET

(Looking East)

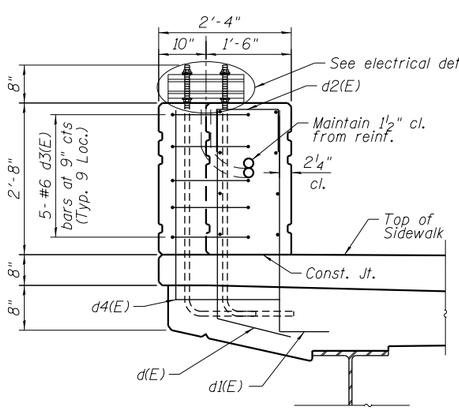


## SECTION A-A

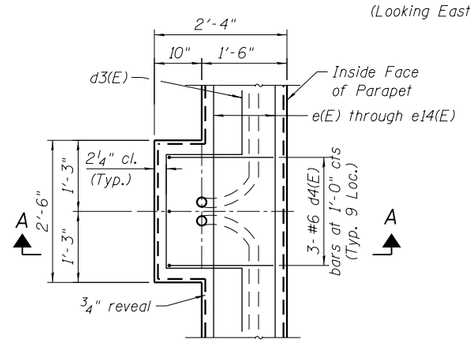


## PARAPET DETAIL AT LIGHTPOLE

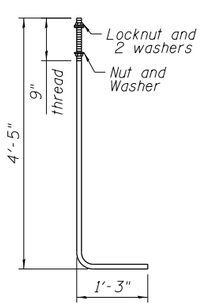


## ANCHOR ROD

Cost of anchor rods is included with Concrete Superstructure.

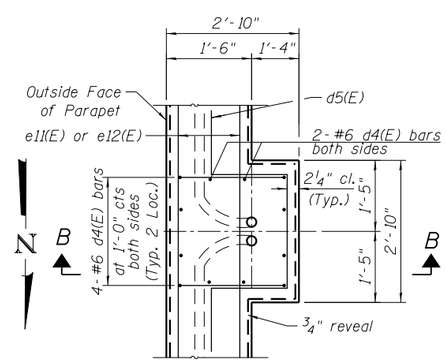


## PARAPET DETAIL AT EAST CANOPY COLUMNS

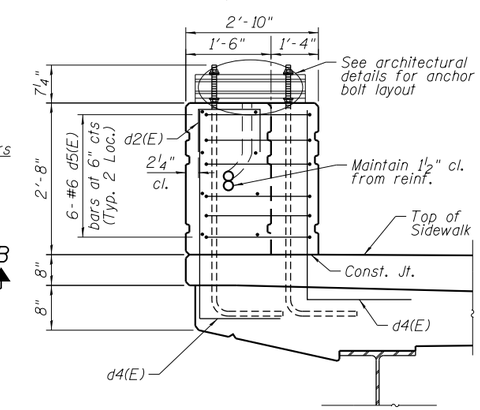


## SECTION B-B

Notes:
For notes, see Sheet S2-32 of S2-81.

| | | | |
|---|---|---|---|
| USER NAME = rlschultz | DESIGNED - WJC | REVISED | |
| | CHECKED - DL | REVISED | |
| PLOT SCALE = 0:1.0000 ':" / in. | DRAWN - WJC | REVISED | |
| PLOT DATE = 9/15/2013 | CHECKED - DL | REVISED | |

**STATE OF ILLINOIS**
**DEPARTMENT OF TRANSPORTATION**

**EAST PARAPET ELEVATION AND DETAILS**
**STRUCTURE NO. 016-1716**

SHEET NO. S2-33 OF S2-81 SHEETS

| F.A.U. RTE. | SECTION | COUNTY | TOTAL SHEETS | SHEET NO. |
|---|---|---|---|---|
| 3730 | 2013-008R | COOK | 559 | 393 |
| | | CONTRACT NO. 60W26 | | |
| | | ILLINOIS FED. AID PROJECT | | |

4133.00 PW
0161716 60W26-S033-Parapet_East.dgn