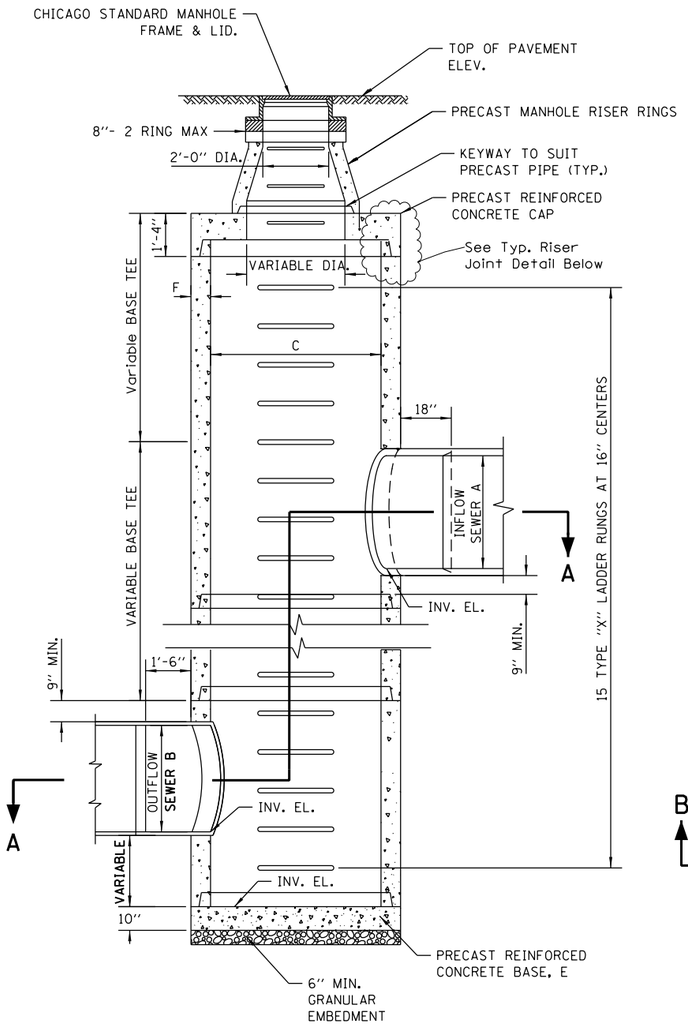

SECTION B-B
SCALE: N.T.S.

Base Tee				Wall Thickness	Cap & Base		Ladder Rung length
A	B	C	D	F	C	E	G
60	60	84	12	8	84	48	48.5
54	54	78	12	7 1/2	78	42	46.5
48	48	72	12	7	72	36	44
42	42	60	9	6	60	24	40
36	36	60	12	6	60	24	40
30	30	48	9	5	48	12	35
24	24	48	12	5	48	12	35
NOTE: ALL MEASUREMENTS ARE IN INCHES							

PRECAST COMPONENT TABLE

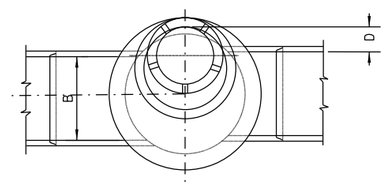

PLAN

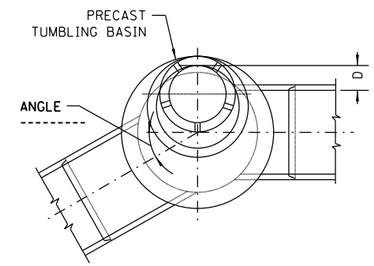

PLAN

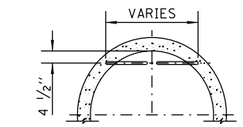

PLAN

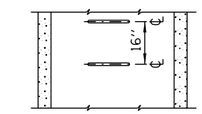

ELEVATION
TYPE Y

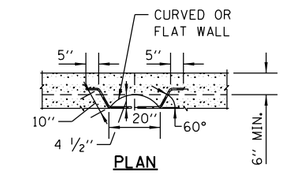

PLAN

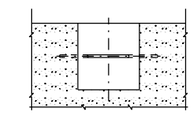

ELEVATION
TYPE X

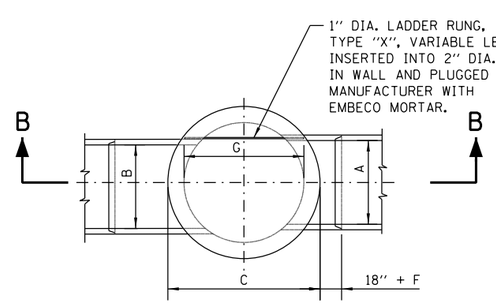

SECTIONAL PLAN A-A

OPTION: W/O BEND

SCALE: N.T.S.

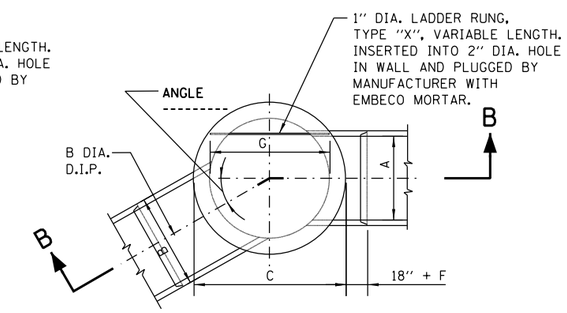

SECTIONAL PLAN A-A

OPTION: WITH BEND

SCALE: N.T.S.

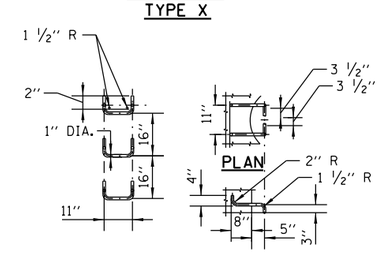

SPACING ELEVATION

HANDHOLD-TYPE Z RUNG

STANDARD LADDER RUNGS

NOTES:

1. PRECAST PIPE AND FITTINGS MUST CONFORM TO A.S.T.M.DESIGNATION C 76; OR "REINFORCED CONCRETE CULVERT STORM DRAIN AND SEWER PIPE" TABLE IV, WALL B OR C;

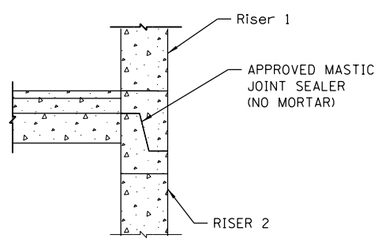

RISER JOINT DETAIL (TYP.)

STANDARD REVISIONS	
DATE	DESCRIPTION
12 /07/09	APPROVED PLAN

PERCENT COMPLETE	DATE
30	
60	
75	
90	
100	
BULLETIN	

CITY OF CHICAGO
DEPARTMENT OF WATER MANAGEMENT
BUREAU OF ENGINEERING SERVICES

PRECAST
TUMBLING BASIN DETAILS

DRAWN: SBW
DESIGNED:
CHECKED:
REVIEWED:

A.12

OF

PN

AECOM
303 EAST WACKER DRIVE, SUITE 1400
CHICAGO, IL 60601-5276
PHONE: (312) 373-7700 FAX: (312) 373-6800

D160W26-sht-CDWM-Detail-07	DESIGNED -	REVISED -
USER NAME = chiua	DRAWN -	REVISED -
PLOT SCALE = 1.0000 ' / in.	CHECKED -	REVISED -
PLOT DATE = 8/15/2013	DATE - 8/20/13	REVISED -

STATE OF ILLINOIS
DEPARTMENT OF TRANSPORTATION

DRAINAGE DETAILS
CHICAGO DEPT OF WATER MANAGEMENT

SCALE: NTS | SHEET 7 OF 9 SHEETS | STA. TO STA.

F.A.I. RTE.	SECTION	COUNTY	TOTAL SHEETS	SHEET NO.
90/94/290	2013-008R	COOK	559	515

CONTRACT NO. 60W26
ILLINOIS FED. AID PROJECT

FILE PATH = pw:\\388039-pwintl.aecomonline.local:PWAECOM00\Documents\01 Americas\Transportation\60269938 Circle\Phase II\000.CAD\006.Roadway\Sheets\60W26.Contract\D160W26-sht-CDWM-Detail-07