Bench Mark: Cut square on southwest parapet wall over I-90 on west end. ±2.5 A/G. Elevation 598.65.

Existing Structure: SN 016-1087 was originally built in 1960 as part of the F.A.I. Route No. 4 Project, Section S-2626.2-1B.
The existing structure is a four (4) span bridge with a reinf. concrete deck supported on concrete T-Beams (Span 1) and steel WF beams (Spans 2-4).
The existing substructure consists of reinforced concrete abutments and multi column piers founded on sub-piers (reinforced concrete caissons).
The existing structure has an overall length of 231'-4½" and an out-to-out deck width of 68'-4".
The existing structure is to be removed and replaced. Harrison Street traffic will be detoured via local roads during construction and bridge will be closed.
Local access to Cermak Pump Station provided via existing structure (SN 016-1088).

Salvage portion of existing East Abutment and North Retaining Wall.

APPROVED
For Structural Adequacy Only
D. Carl Lungren
Engineer of Bridges & Structures

DESIGN SPECIFICATIONS

2012 AASHTO LRFD Bridge Design Specifications, 6th Edition with 2013 Interim Revisions

LOADING HL-93

Allow 50#/sq. ft. for future wearing surface.

DESIGN STRESSES

FIELD UNITS

f'c = 3,500 psi
f'c = 7,000 psi (West Abut.)
fy = 60,000 psi (Reinforcement)
fy = 50,000 psi (M270 Grade 50)

EXISTING UNITS

f'c = 3,000 psi
fy = 40,000 psi (Reinforcement)

SEISMIC DATA

Seismic Performance Zone (SPZ) = 1
Design Spectral Acceleration at 1.0 sec. (S_{D1}) = 0.085g
Design Spectral Acceleration at 0.2 sec. (S_{DS}) = 0.144g
Soil Site Class = D

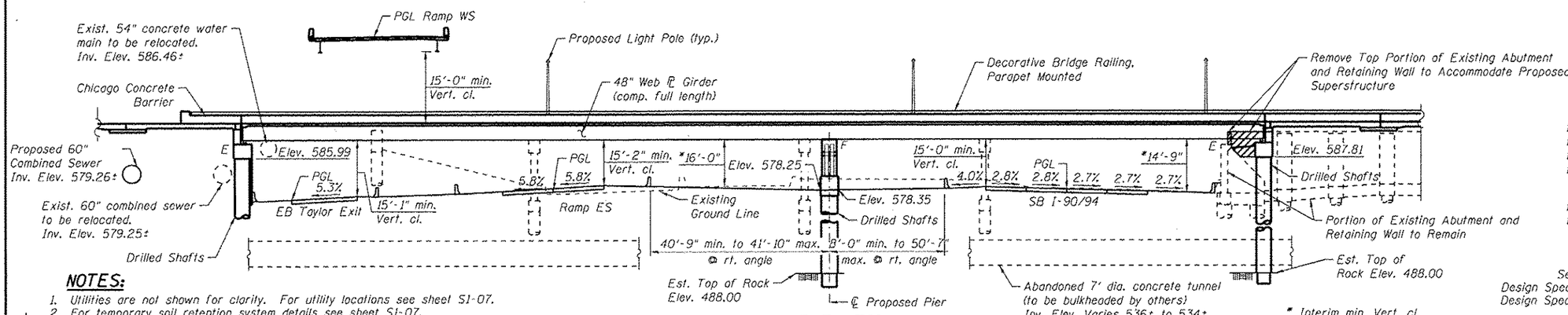

ELEVATION

NOTES:

1. Utilities are not shown for clarity. For utility locations see sheet S1-07.
2. For temporary soil retention system details see sheet S1-07.
3. See Civil Plans for roadway barrier removal under the structure along ramps and I-90/94.

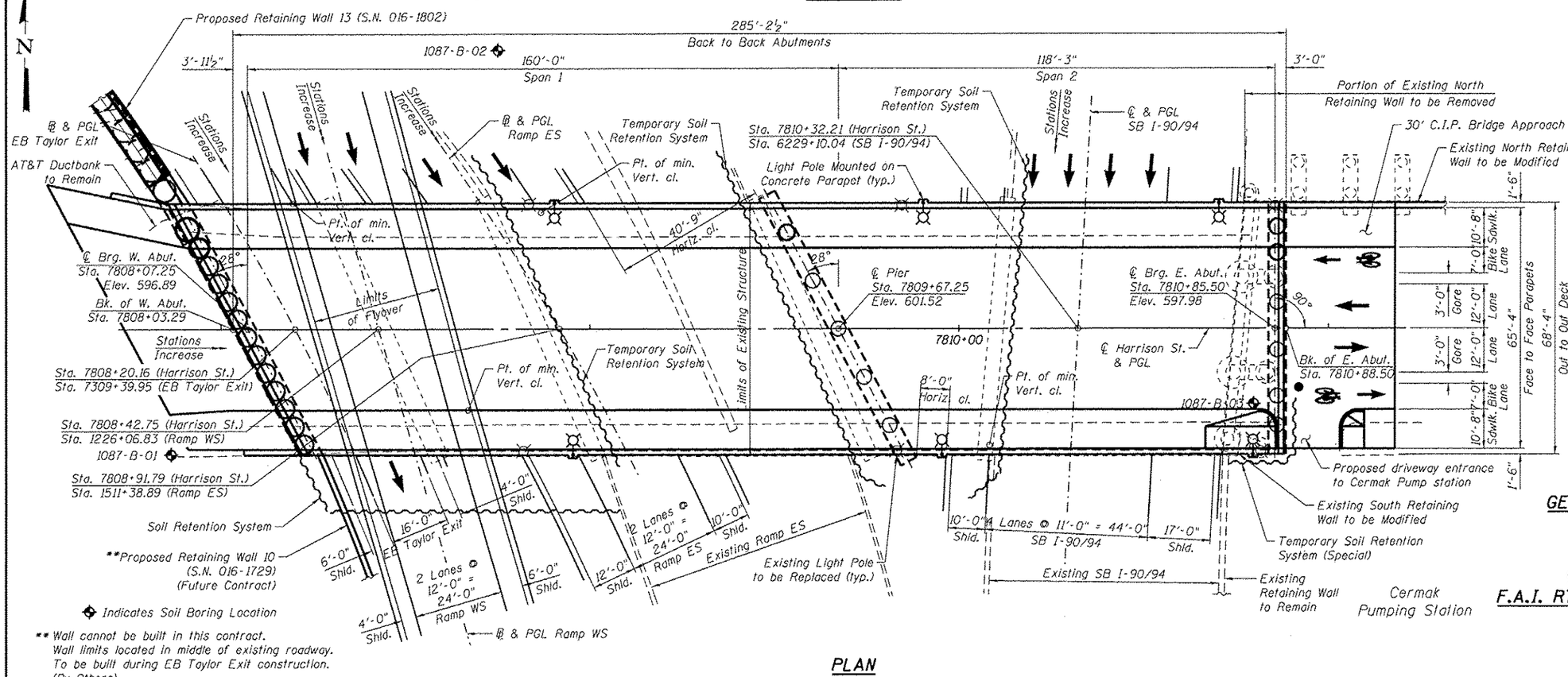

PLAN

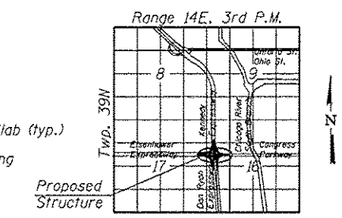

LOCATION SKETCH

BRAD M. RADOVICH 081.005954 REGISTERED STRUCTURAL ENGINEER OF ILLINOIS

Brad M Rad 8/19/2013
BRAD M. RADOVICH DATE
LICENSE EXPIRES 11/30/2014

GENERAL PLAN & ELEVATION
HARRISON ST. OVER
F.A.I. RTE. SB 90/94
(DAN RYAN EXPRESSWAY)
F.A.I. RTE. 90/94 - SECTION 2013-008R
COOK COUNTY
STATION 7810+32.21
STRUCTURE NO. 016-1713

AECOM

USER NAME = dunkerleyb	DESIGNED - EJO	REVISED	
	CHECKED - ATB	REVISED	
PLOT SCALE = N.T.S.	DRAWN - MRK	REVISED	
PLOT DATE = 8/21/2013	CHECKED - EJO	REVISED	

STATE OF ILLINOIS
DEPARTMENT OF TRANSPORTATION

GENERAL PLAN AND ELEVATION
STRUCTURE NO. 016-1713
SHEET NO. S1-01 OF S1-48 SHEETS

F.A.I. RTE.	SECTION	COUNTY	TOTAL SHEETS	SHEET NO.
90/94/290	2013-008R	COOK	559	251
		CONTRACT NO. 60W26		
		ILLINOIS FED. AID PROJECT		

0161713-60W26-S01-GPE