Notes:
Pour steps monolithically with cap.
Space reinforcement in cap to miss anchor bolts.

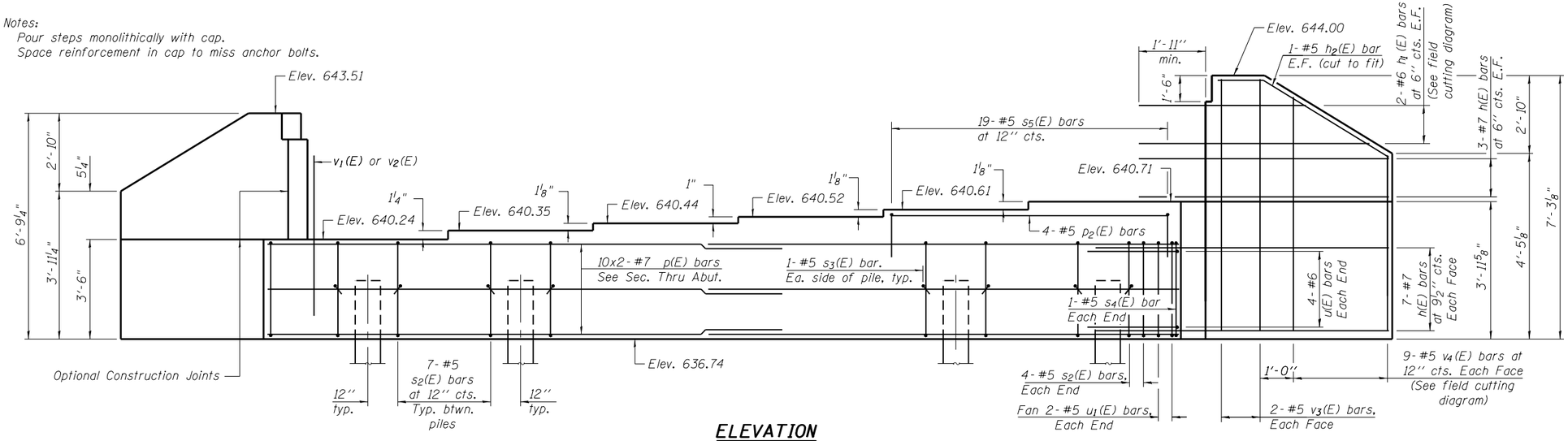

ELEVATION

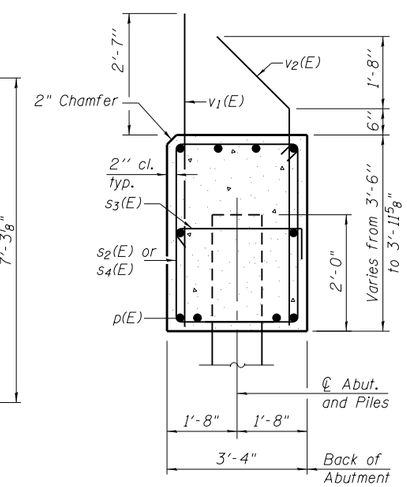

SEC. THRU ABUT.

Dimensions at right angles to abutment.

PILE DATA

Type: Metal Shell 14" dia. x 0.25"
Nominal Required Bearing: 328 kips
Factored Resistance Available: 180 kips
Est. Length: 55'
No. Production Piles: 7
No. Test Piles: 1

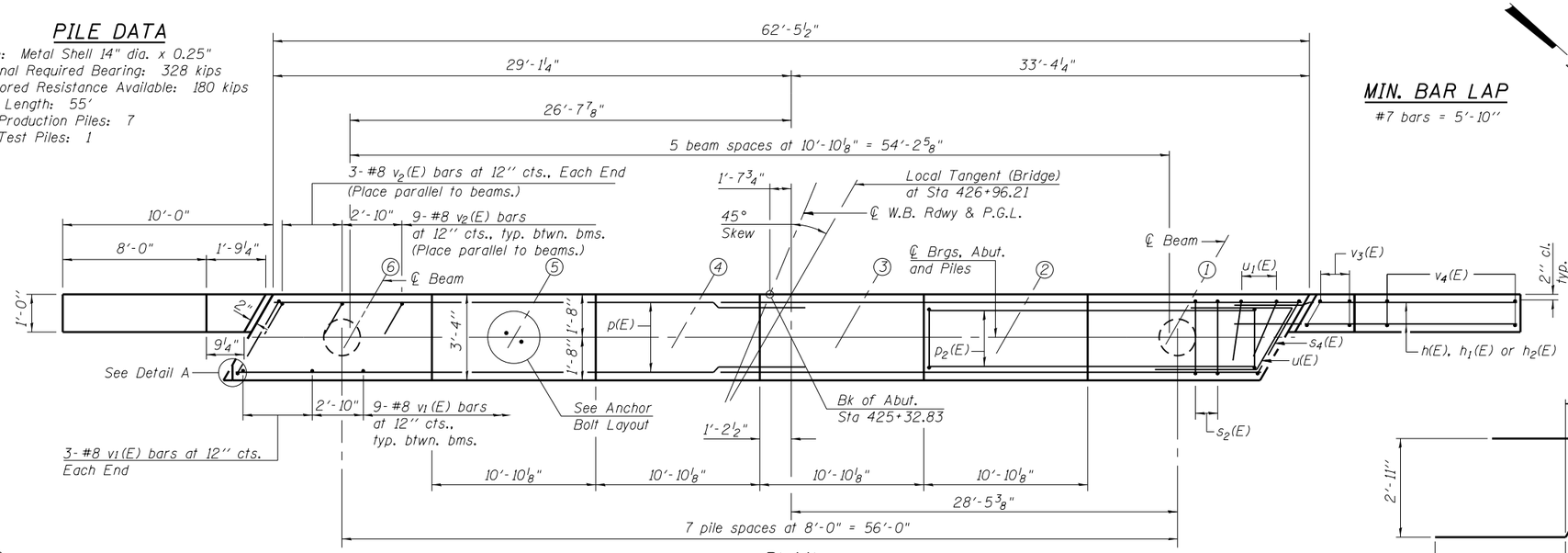

PLAN

MIN. BAR LAP

#7 bars = 5'-10"

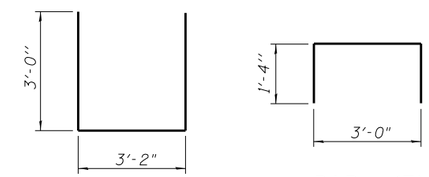

BAR u1(E)

BAR s5(E)

BILL OF MATERIAL

Bar	No.	Size	Length	Shape
h(E)	40	#7	13'-6"	
h1(E)	4	#6	21'-3"	
h2(E)	4	#5	9'-8"	
p(E)	20	#7	34'-0"	
p2(E)	4	#5	18'-5"	
s2(E)	57	#5	13'-3"	
s3(E)	16	#5	4'-0"	
s4(E)	2	#5	15'-9"	
s5(E)	19	#5	5'-8"	
u(E)	8	#6	11'-10"	
u1(E)	4	#5	9'-2"	
v1(E)	51	#8	5'-11"	
v2(E)	51	#8	6'-2"	
v3(E)	8	#5	6'-5"	
v4(E)	18	#5	10'-2"	
Structure Excavation			Cu. Yd.	217
Concrete Structures			Cu. Yd.	32.9
Reinforcement Bars, Epoxy Coated			Pound	5,810
Furnishing Metal Shell Piles, 14"x0.25"			Foot	385
Driving Piles			Foot	385
Test Pile Metal Shells			Each	1

For details of piles see sheet 35 of 43.
Bars indicated thus 10x2-#7 etc. indicates 10 line of bars with 2 lengths per line.

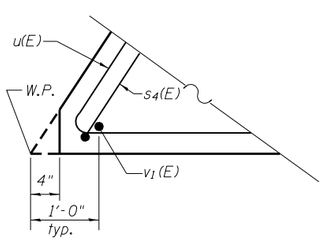

DETAIL A

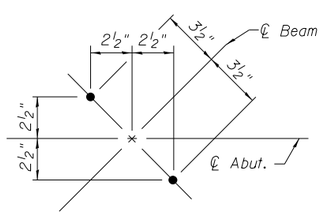

ANCHOR BOLT LAYOUT

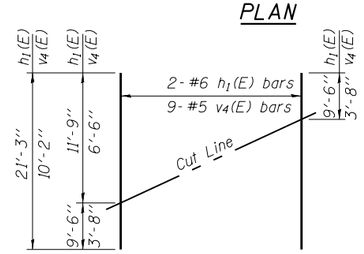

FIELD CUTTING DIAGRAM

Order $h_1(E)$ and $v_4(E)$ full length. Cut as shown and use remainder of bars in opposite face.

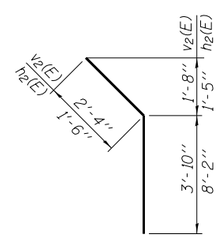

BAR v2(E) & h2(E)

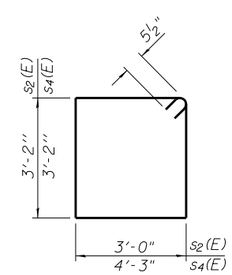

BAR s2(E) & s4(E)

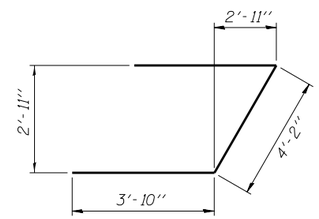

BAR u(E)

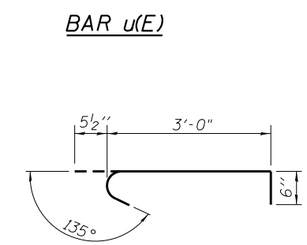

BAR s3(E)

QUIGG ENGINEERING INC	USER NAME = tfrey	DESIGNED - SCD	REVISED
	FILE NAME =	CHECKED - DRB	REVISED
	PLOT SCALE = 80.0000 ' / ft.	DRAWN - TKW	REVISED
	PLOT DATE = 7/29/2013	CHECKED - SCD	REVISED

STATE OF ILLINOIS
DEPARTMENT OF TRANSPORTATION

WEST ABUTMENT DETAILS
STRUCTURE NO. 006-0185 (W.B.)
SHEET NO. 28 OF 43 SHEETS

F.A.I RTE.	SECTION	COUNTY	TOTAL SHEETS	SHEET NO.
80	(06-2)BR-3,4	BUREAU	133	72
		CONTRACT NO. 66998		
		ILLINOIS FED. AID PROJECT		

FILE NAME = 0060184.0185.66998-28-W.4bus.WB.dgn
MODEL = Default
PLOT DRIVER = V8i.PDF_11x17.pltcfg