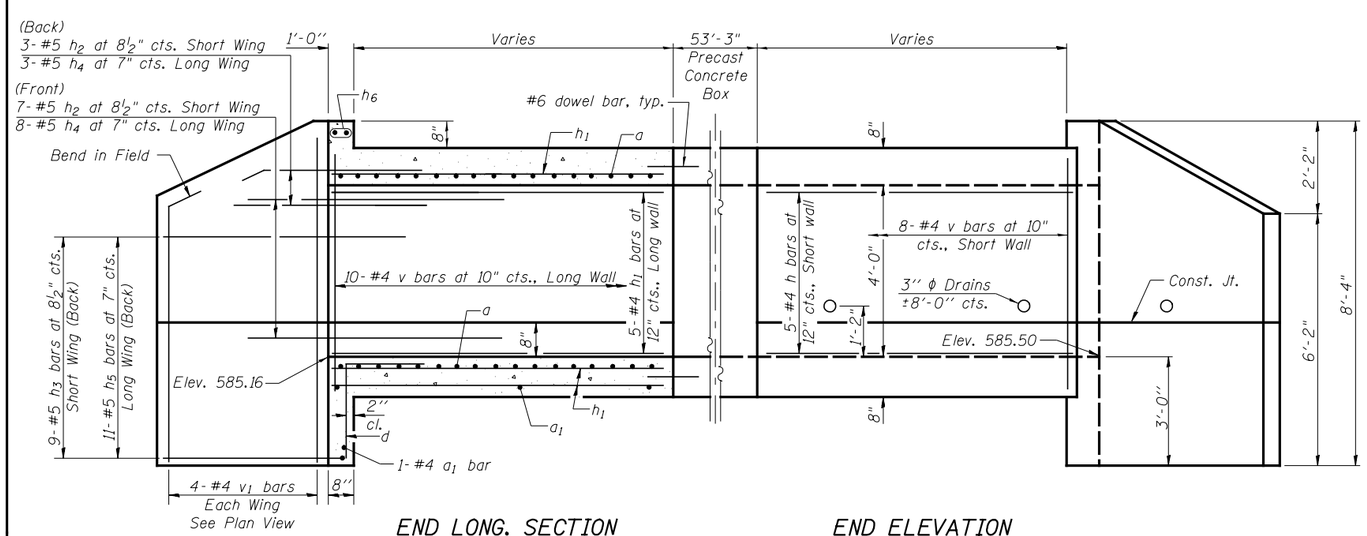

END LONG. SECTION
(Long wall)

END ELEVATION
(Short wall)

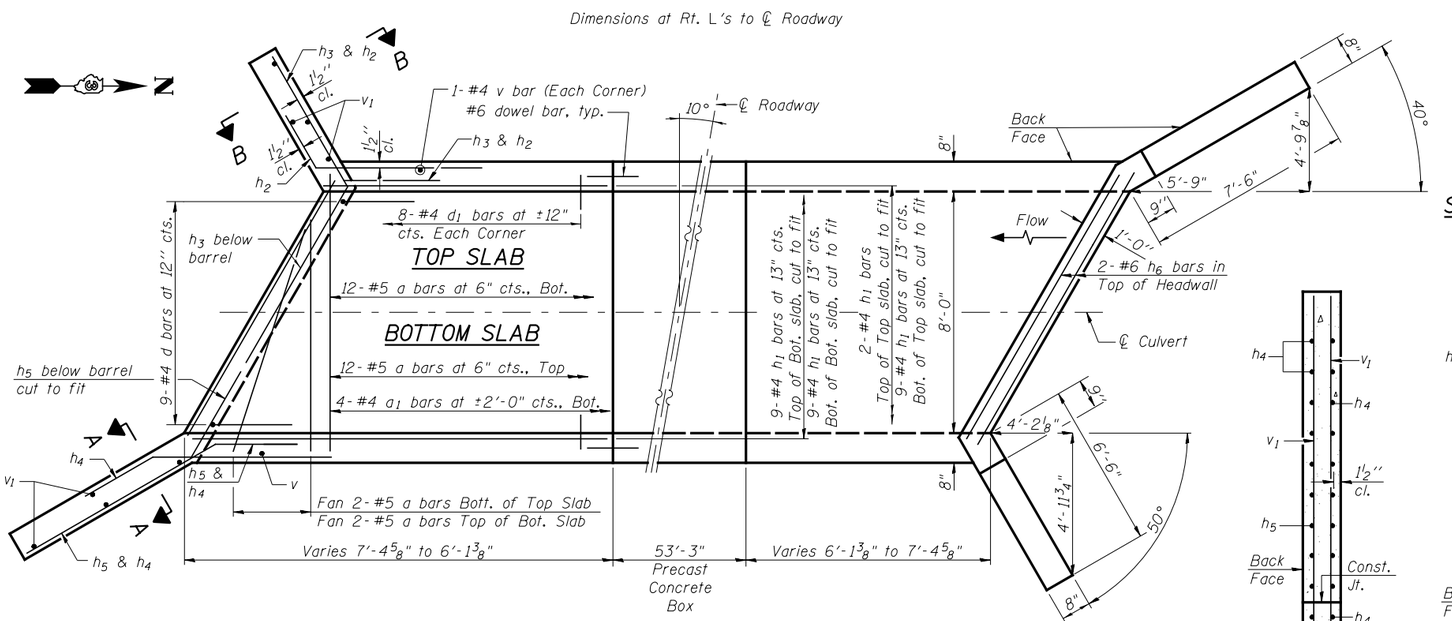

SHOWING REINFORCEMENT

SHOWING OUTLINES

PLAN

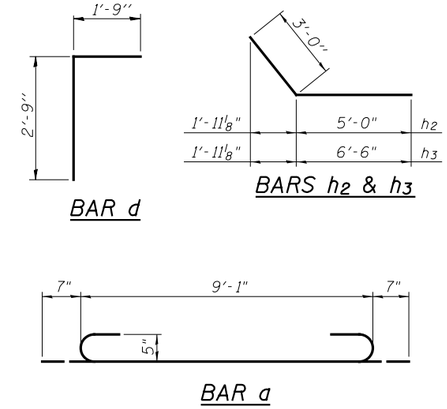

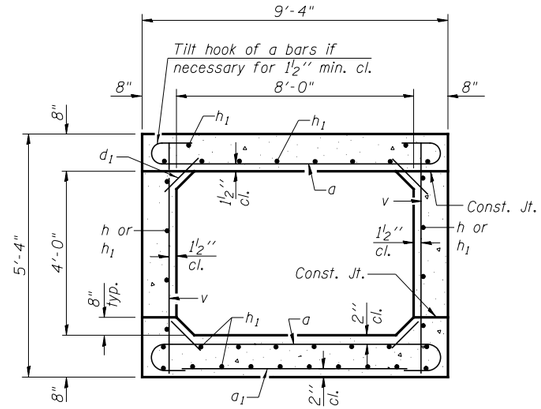

SECTION THRU BARREL

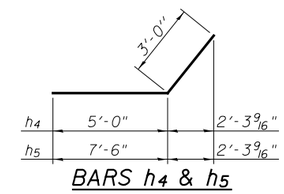

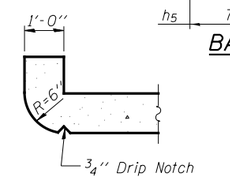

SECTION THRU HEADWALL
(Up Stream End Only)

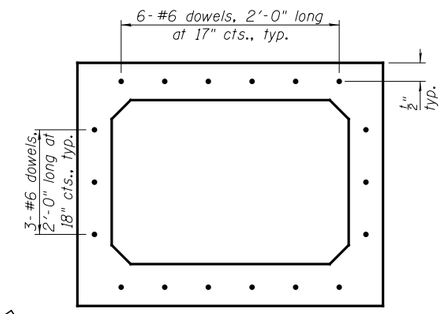

PRECAST CONCRETE CULVERT END ELEVATION

(Section is symmetrical about ℄ culvert)

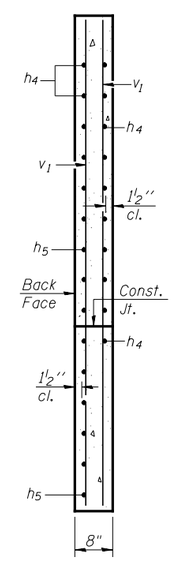

SECTION A-A

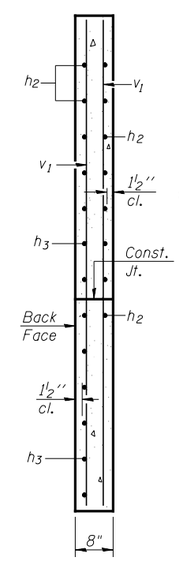

SECTION B-B

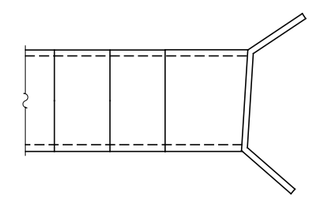

ALIGNED PRECAST SECTIONS
PLAN

BILL OF MATERIAL

Bar	No.	Size	Length	Shape
a	56	#5	10'-3"	
a_1	10	#4	9'-1"	
d	18	#4	4'-6"	
d_1	64	#4	1'-2"	
h	10	#4	5'-9"	
h_1	68	#4	7'-2"	
h_2	20	#5	8'-0"	
h_3	20	#5	9'-6"	
h_4	22	#5	8'-0"	
h_5	24	#5	10'-6"	
h_6	4	#6	9'-1"	
v	40	#4	5'-1"	
v_1	16	#4	8'-1"	
Concrete Box Culverts			Cu. Yd.	14.6
Reinforcement Bars			Pound	2220

NOTES

A distance of half the length of the wingwall but not less than six feet of the barrel shall be poured monolithically with the wingwalls.

REVISED -	USER NAME =	DESIGNED - PSS	
REVISED -	FILE NAME =	CHECKED - VPT	
REVISED -	PLOT SCALE =	DRAWN - AJF	
REVISED -	PLOT DATE =	CHECKED - VPT	

LIN ENGINEERING, LTD.
Consulting Engineers
Springfield, Illinois

STATE OF ILLINOIS
DEPARTMENT OF TRANSPORTATION

CULVERT DETAILS
WATER CROSSING 143

SHEET NO. 2 OF 3 SHEETS

F.A.P. RTE.	SECTION	COUNTY	TOTAL SHEETS	SHEET NO.
326	(110)R, BR & BR-1	GRUNDY	644	397

CONTRACT NO. 66B83

ILLINOIS FED. AID PROJECT