Notes:
Pour steps monolithically with cap.
Space reinforcement bars to miss anchor bolts. See sheet 18 of 28 for details of anchor bolts.

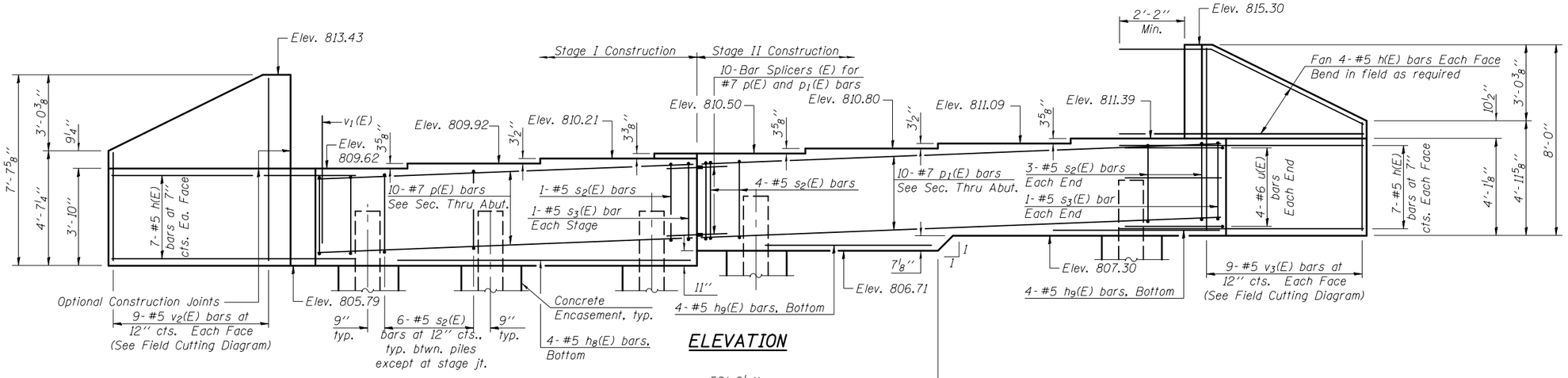

ELEVATION

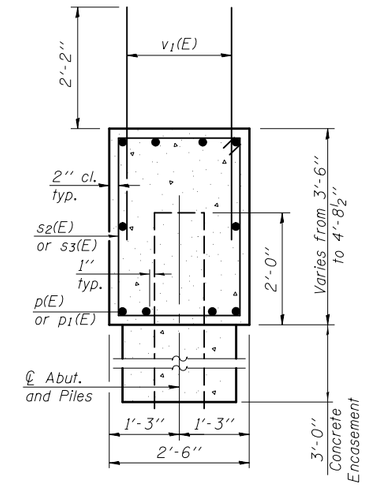

SEC. THRU ABUT.

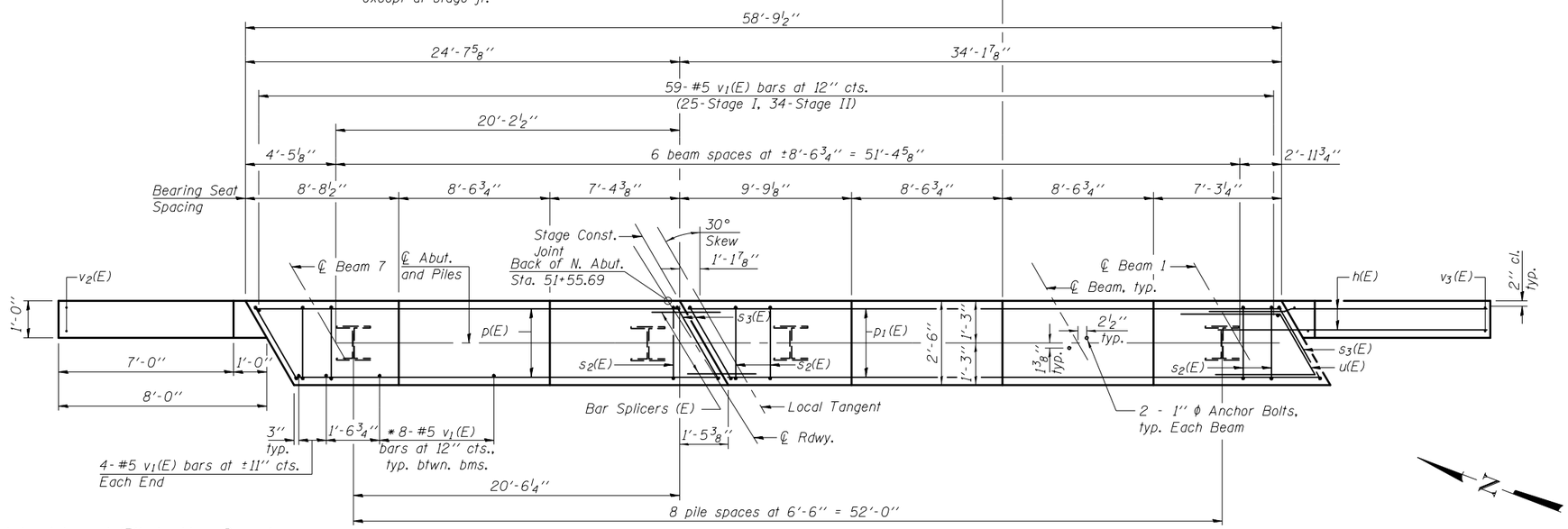

PLAN

* Includes 4 bars at 13" cts. btwn. Beam 4 and Stage Const. Jt. and 4 bars at 11" cts. btwn. Beam 5 and Stage Const. Jt.

BILL OF MATERIAL

Bar	No.	Size	Length	Shape
h(E)	44	#5	10'-8"	
h8(E)	4	#5	18'-0"	
h9(E)	8	#5	10'-0"	
p(E)	10	#7	24'-2"	
p1(E)	10	#7	33'-9"	
s2(E)	53	#5	11'-7"	
s3(E)	4	#5	12'-3"	
u(E)	8	#6	9'-5"	
v1(E)	115	#5	4'-4"	
v2(E)	9	#5	11'-6"	
v3(E)	9	#5	12'-4"	
Structure Excavation			Cu. Yd.	135
Concrete Structures			Cu. Yd.	25.6
Reinforcement Bars, Epoxy Coated			Pound	3380
Furnishing Steel Piles HP12x53			Foot	304
Driving Piles			Foot	304
Test Pile Steel HP12x53			Each	1
Concrete Encasement			Cu. Yd.	3.1

For details of Bar Splicers, see sheet 25 of 28.
For details of piles and Concrete Encasement, see sheet 24 of 28.

PILE DATA

Type: Steel - HP12x53
Nominal Required Bearing: 239 kips
Factored Resistance Available: 131 kips
Est. Length: 38 ft. (all piles)
No. Production Piles: 8
No. Test Piles: 1

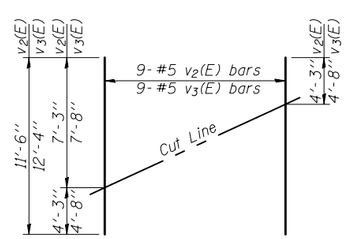

FIELD CUTTING DIAGRAM

Order v2(E) and v3(E) full length. Cut as shown and use remainder of bars in opposite face.

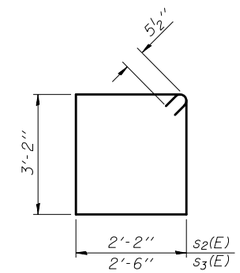

BARS s2(E) & s3(E)

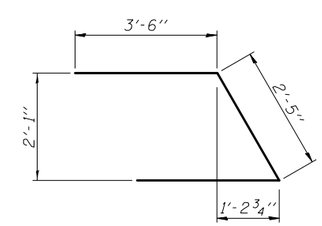

BAR u(E)

FILE NAME = $FILES$	USER NAME = piersonbr	DESIGNED - BAS	REVISED -	STATE OF ILLINOIS DEPARTMENT OF TRANSPORTATION	NORTH ABUTMENT STRUCTURE NO. 057-0253	F.A.I. RTE.	SECTION	COUNTY	TOTAL SHEETS / SHEET NO.
MAURER-STUTZ ENGINEERS SURVEYORS		CHECKED - JAE	REVISED -			74	(57-20HB)BR	MCLEAN	440 / 226
	PLOT SCALE =	DRAWN - SGM	REVISED -					CONTRACT NO. 70570	
	PLOT DATE = 7/30/2013 $TIME$	CHECKED - BAS	REVISED -		SHEET NO. 19 OF 28 SHEETS		ILLINOIS FED. AID PROJECT		