Note:
Pour steps monolithically with cap.

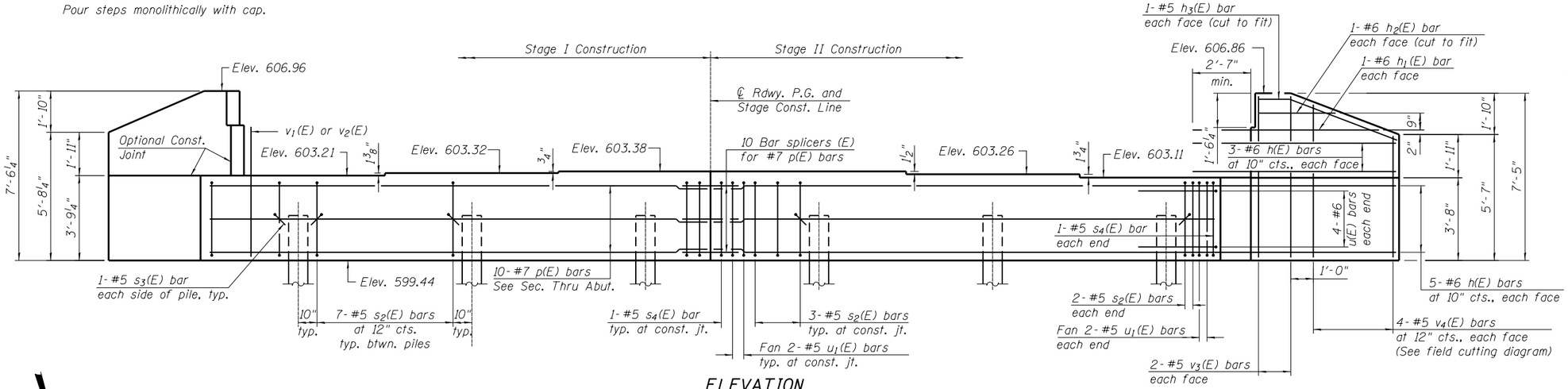

ELEVATION

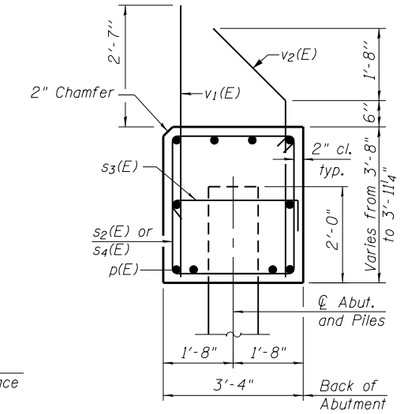

SEC. THRU ABUT.

Dimensions at right angles to abutment.

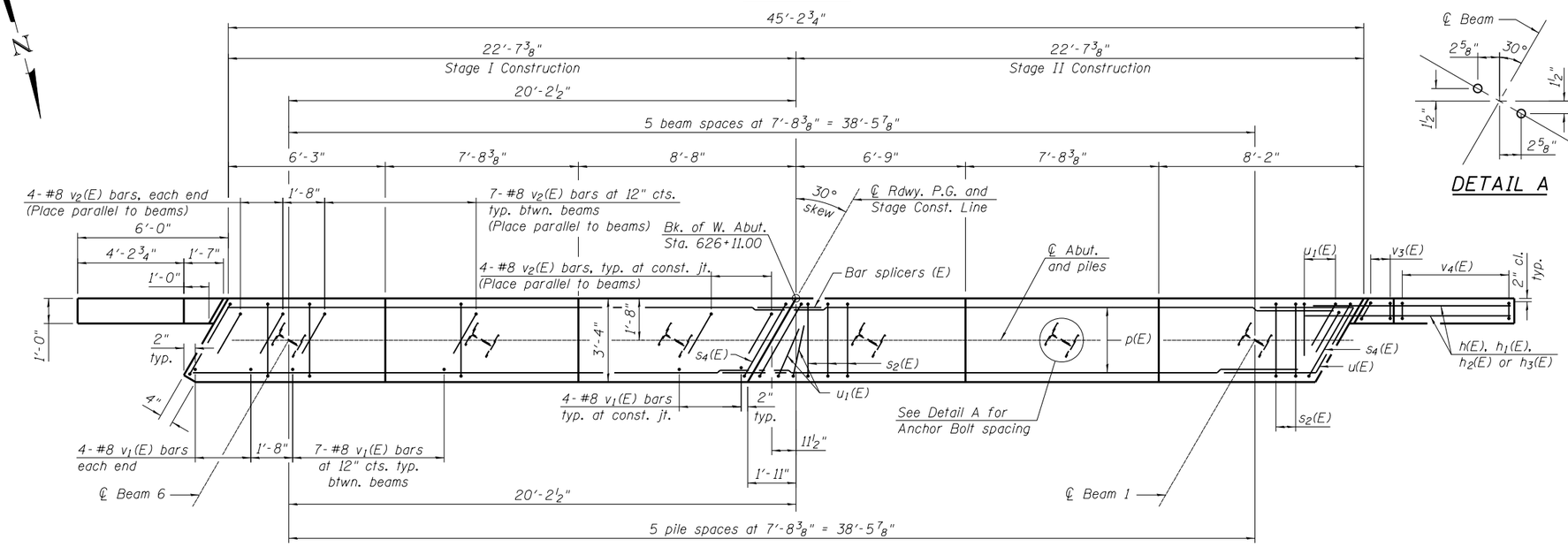

PLAN

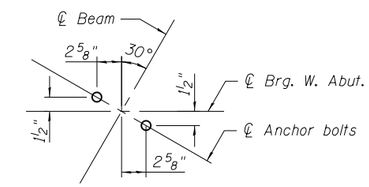

DETAIL A

BILL OF MATERIAL

Bar	No.	Size	Length	Shape
h(E)	32	#6	8'-5"	
h_1(E)	4	#6	7'-10"	
h_2(E)	4	#6	3'-2"	
h_3(E)	4	#5	5'-9"	
p(E)	20	#7	22'-3"	
s_2(E)	38	#5	13'-7"	
s_3(E)	12	#5	4'-0"	
s_4(E)	4	#5	14'-5"	
u(E)	8	#6	11'-1"	
u_1(E)	8	#5	8'-4"	
v_1(E)	44	#8	6'-1"	
v_2(E)	44	#8	6'-4"	
v_3(E)	8	#5	7'-1"	
v_4(E)	8	#5	11'-11"	
Structure Excavation			Cu. Yd.	137
Concrete Structures			Cu. Yd.	24.3
Reinforcement Bars, Epoxy Coated			Pound	3,880
Bar Splicers			Each	10
Furnishing Steel Piles HP 12 x 53			Foot	190
Driving Piles			Foot	190
Test Pile Steel HP 12 x 53			Each	1

For details of piles, see Sheet 21 of 31.
For details of bar splicers, see Sheet 20 of 31.
Space reinforcement in cap to miss anchor bolts.

PILE DATA

Type: Steel HP 12 x 53
Nominal Required Bearing: 419k
Factored Resistance Available: 230k
Est. Length: 38 ft.
No. Production Piles: 5
No. Test Piles: 1

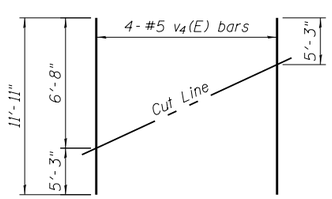

FIELD CUTTING DIAGRAM

Order v_4(E) full length. Cut as shown and use remainder of bars in opposite face.

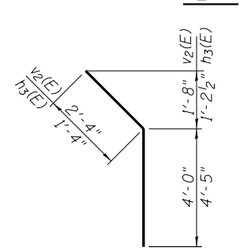

BAR v_2(E) & h_3(E)

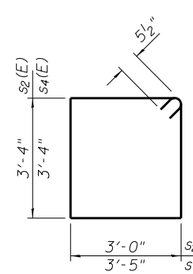

BAR s_2(E) & s_4(E)

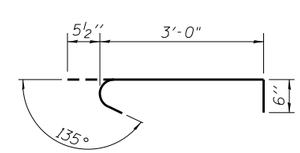

BAR s_3(E)

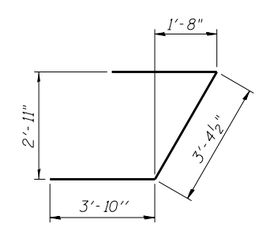

BAR u(E)

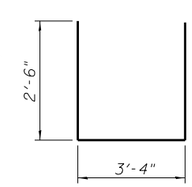

BAR u_1(E)