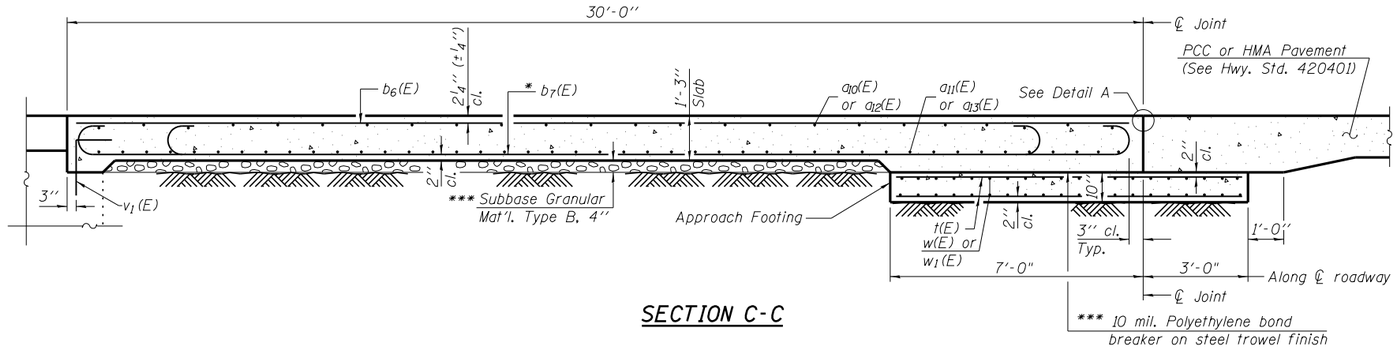

SECTION C-C

Notes:

- See sheet 12 of 25 for Detail A and View B-B.
- Approach slab and parapet concrete shall be paid for as Concrete Superstructure.
- Approach footing concrete shall be paid for as Concrete Structures.
- Reinforcement shall be paid for as Reinforcement Bars, Epoxy Coated.
- For $v_1(E)$ bar details, see sheet 11 of 25.
- The approach footing maximum applied service bearing pressure (Qmax) = 2.0 ksf.
- Cost of excavation for approach footing included with Concrete Structures.
- For additional parapet details, see sheet 12 of 25.

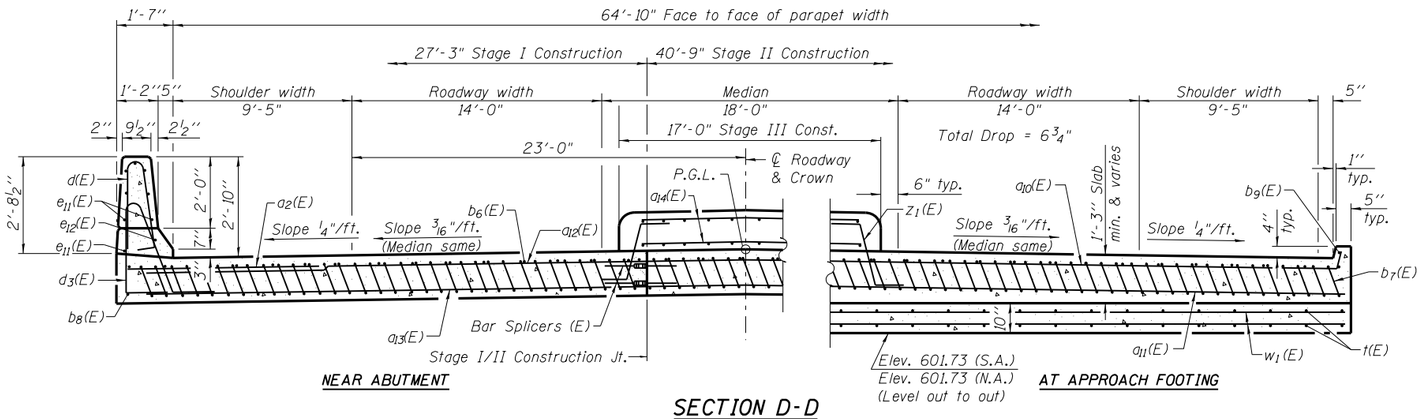

SECTION D-D

(Looking South @ South Approach, North Approach Similar)
(See Plan for dimensions not shown)

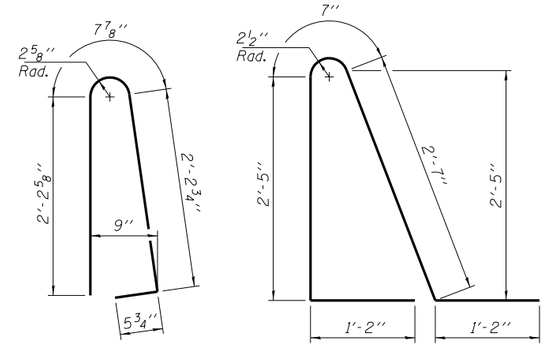

BAR d(E)

BAR d3(E)

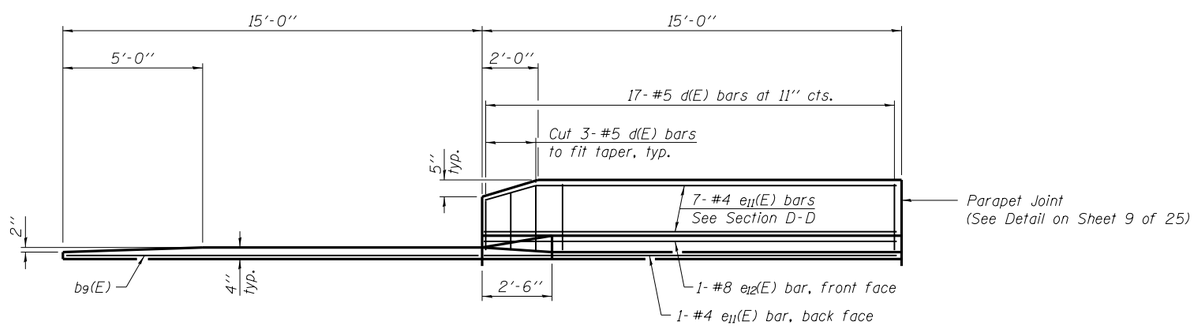

VIEW E-E

* Tilt #9 $b_7(E)$ bars as required to maintain clearance.

*** Cost included with Concrete Superstructure.

TWO APPROACHES BILL OF MATERIAL

	Bar	No.	Size	Length	Shape
	$a_2(E)$	48	#6	6'-6"	
	$a_{10}(E)$	50	#4	40'-2"	
	$a_{11}(E)$	92	#5	39'-10"	
	$a_{12}(E)$	50	#4	26'-8"	
	$a_{13}(E)$	92	#5	26'-4"	
	$a_{14}(E)$	96	#5	16'-9"	
	$b_6(E)$	182	#4	29'-8"	
	$b_7(E)$	322	#9	29'-9"	
	$b_8(E)$	4	#4	14'-8"	
	$b_9(E)$	4	#4	14'-10"	
	$d(E)$	68	#5	5'-7"	
	$d_3(E)$	68	#5	7'-11"	
	$e_{11}(E)$	32	#4	14'-8"	
	$e_{12}(E)$	4	#8	14'-8"	
	$t(E)$	272	#4	9'-8"	
	$w(E)$	80	#5	26'-3"	
	$w_1(E)$	80	#5	39'-9"	
**	$z_1(E)$	100	#5	2'-6"	
	Concrete Superstructure			Cu. Yd.	222.8
	Concrete Structures			Cu. Yd.	42.0
	Reinforcement Bars, Epoxy Coated			Pound	57,220

** Diagram for $z_1(E)$ bar on Sheet 9 of 25.

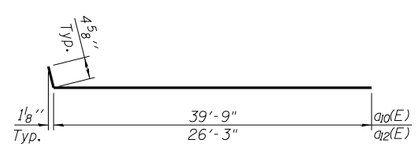

BAR $a_{10}(E)$ & $a_{12}(E)$

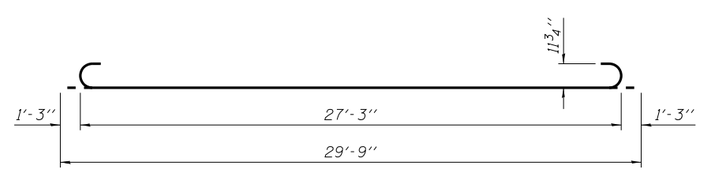

BAR $b_7(E)$

(Sheet 2 of 2)

FILE NAME = TR420 over FAI-72.dgn	USER NAME =	DESIGNED - SAL	REVISED -
		CHECKED - MTH	REVISED -
	PLOT SCALE =	DRAWN - TJW	REVISED -
	PLOT DATE =	CHECKED - MTH	REVISED -

STATE OF ILLINOIS
DEPARTMENT OF TRANSPORTATION

BRIDGE APPROACH SLAB DETAILS
OVERPASS RD. (TR-420) OVER F.A.I.-72 - S.N. 084-0154

SHEET NO. 13 OF 25 SHEETS

F.A.I. RTE.	SECTION	COUNTY	TOTAL SHEETS	SHEET NO.
72	(84-10-1,2) RS-3	SANGAMON	194	160
		CONTRACT NO. 72C90		
FED. ROAD DIST. NO. 6	ILLINOIS	FED. AID PROJECT		