DESIGNER NOTES:
1. Include State STD# 606001 for combination concrete curb and gutter details.
2. Include State STD# 420001 for pavement joints.
3. Include State STD# 602701 for cast iron steps.
4. Include District CADD Standard for frame and grates.
5. Include District CADD Standard for precast reinforced concrete flat slab top.
6. Include District Special Provision. Pay item includes inlet - manhole, flat slab top, transitional c.c.c&g. and frame and grate. All work within pay limits.
7. Specify diameter of inlet - manhole in plans.
8. Specify grate type in plans.

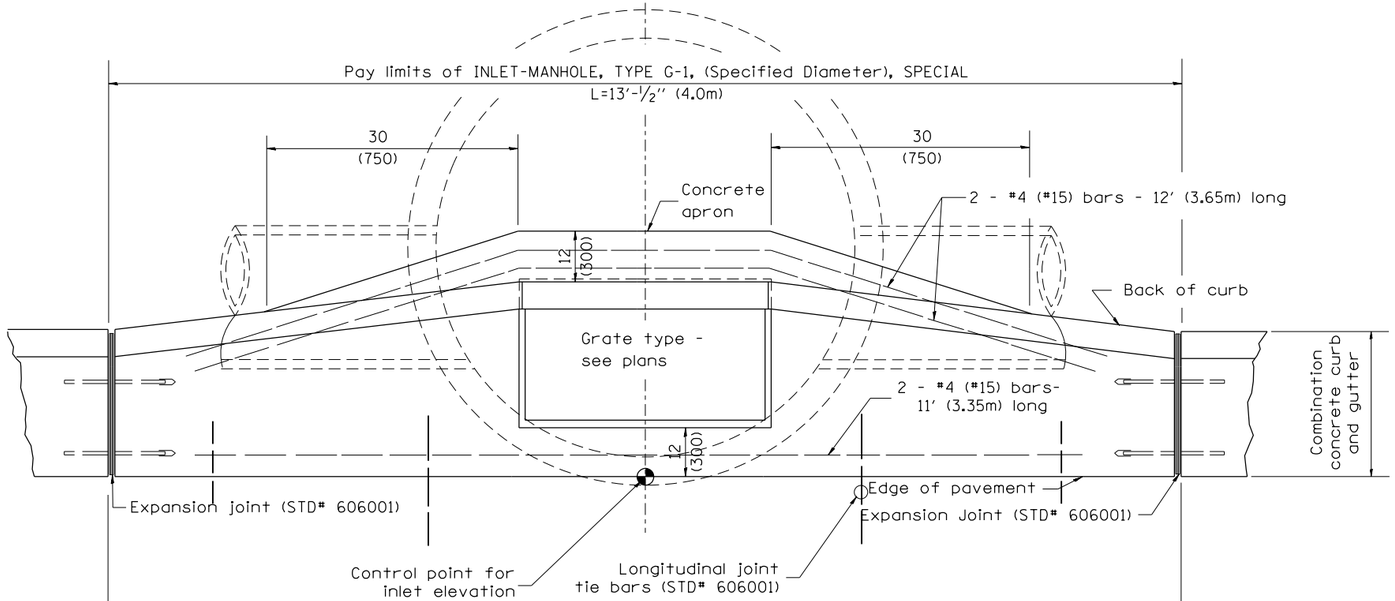

PLAN

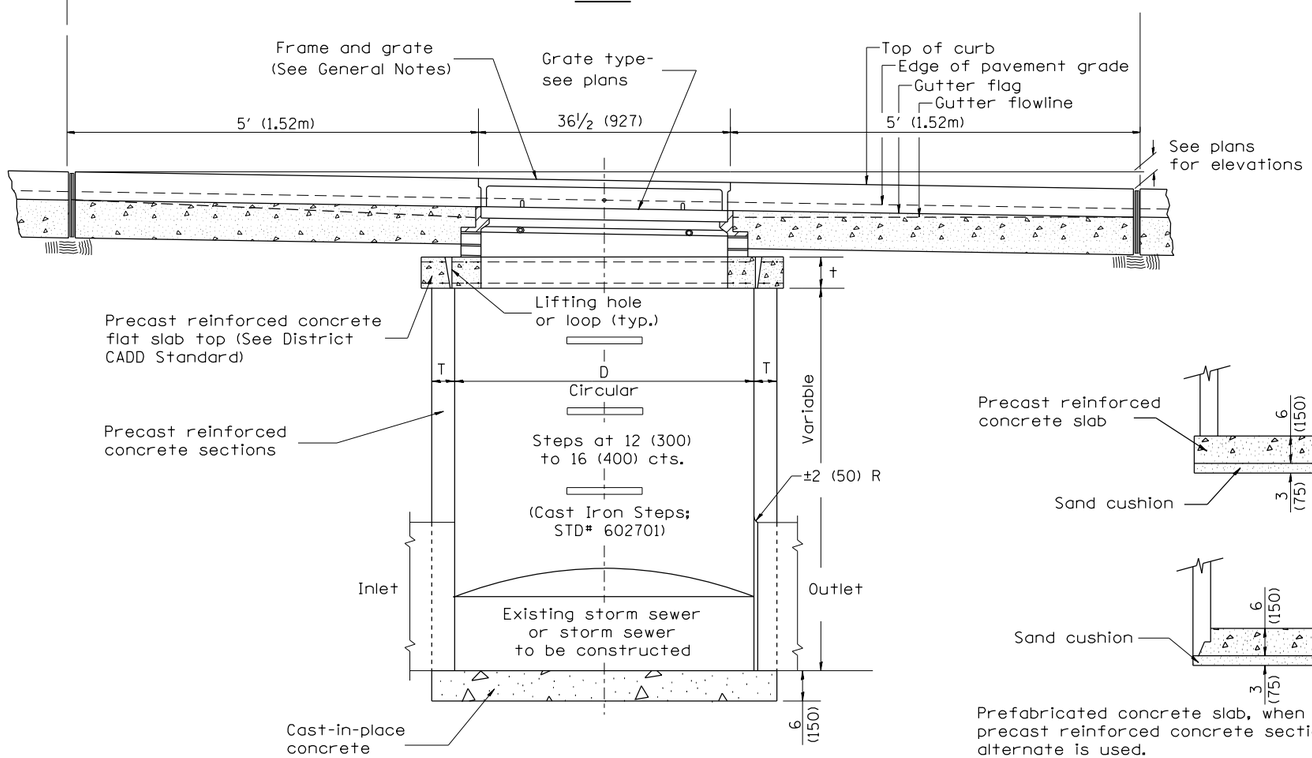

ELEVATION
(FRONT)

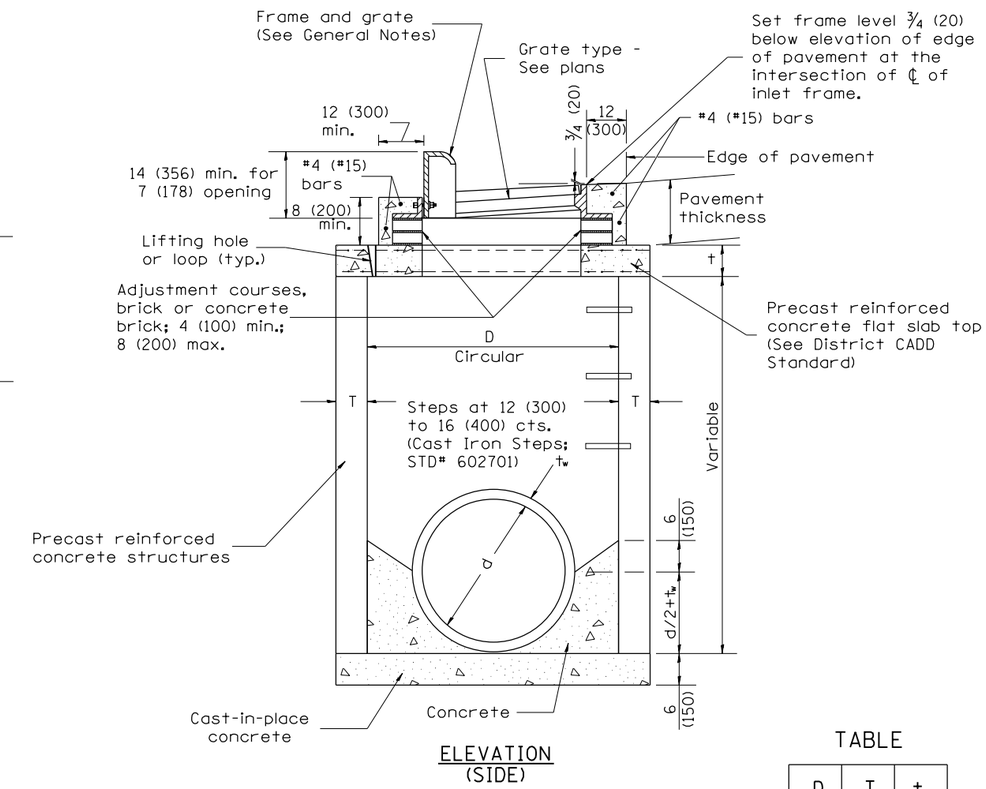

ELEVATION
(SIDE)

TABLE

D	T	t
4' (1.2m)	5 (125)	6 (150)
5' (1.5m)	6 (150)	8 (200)
6' (1.8m)	7 3/4 (195)	8 (200)
8' (2.4m)	9 (225)	10 (250)

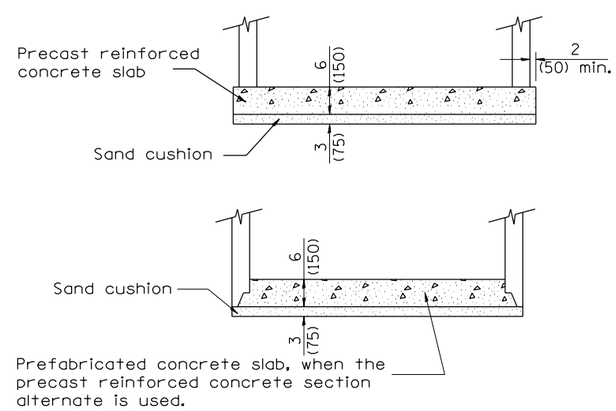

ALTERNATE BOTTOM SLAB

GENERAL NOTES

1. Inlet-manhole construction shall be in accordance with Section 602 of the Standard Specifications.
2. Combination concrete curb and gutter shall be constructed in accordance with Section 606 of the Standard Specifications.
3. See District CADD Standard 604001-D4 for frame and grates.
4. See District CADD Standard for precast reinforced concrete flat slab top.

All dimensions are in inches (millimeters) unless otherwise noted.

01-01-97	RENUM. B-4.06, NEW REVISION BOX	T.P.
12-01-98	CORRECT E.O.P. NOTE	J.A.
10-99	REVISION TO GENERAL NOTES	J.A.
10-16-06	REVISED TO 2007 SPEC.	M.A.

STATE OF ILLINOIS
DEPARTMENT OF TRANSPORTATION

NOT TO SCALE

INLET-MANHOLE, TYPE G-1, SPECIAL

CADD STD. 602026-D4

F.A. RTE.	SECTION	COUNTY	TOTAL SHEETS	SHEET NO.
		CONTRACT NO.		
FED. ROAD DIST. NO.	ILLINOIS	FED. AID PROJECT		