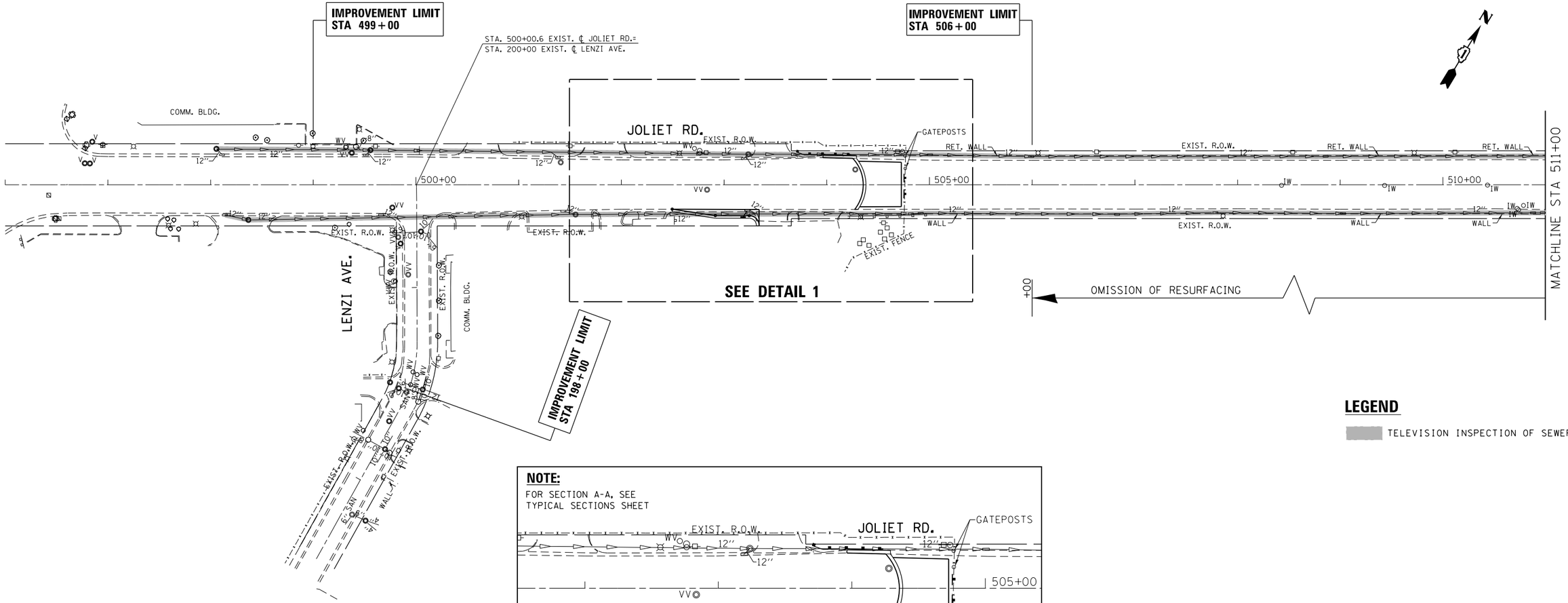

NOTE:

FOR SECTION A-A, SEE
TYPICAL SECTIONS SHEET

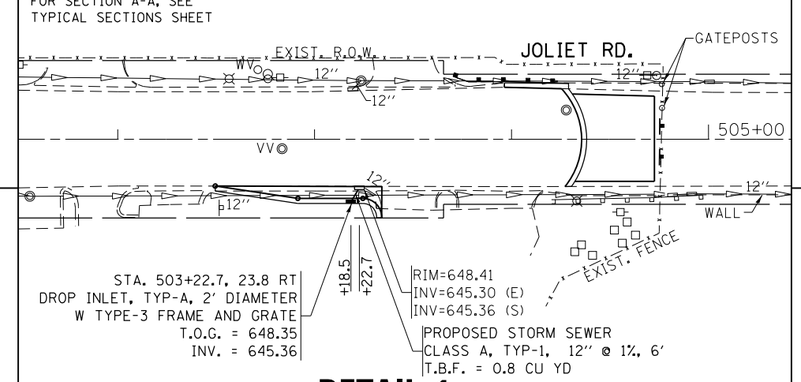

DETAIL 1

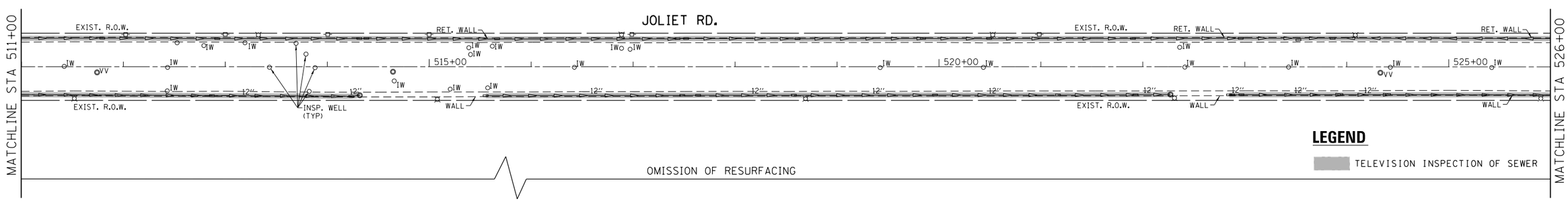

FILE NAME = c:\pw_work\pwidot\windat\d0254883\P13591-sht-gennote.dgn	USER NAME = windat	DESIGNED -	REVISED -	STATE OF ILLINOIS DEPARTMENT OF TRANSPORTATION	EXISTING AND PROPOSED DRAINAGE PLAN JOLIET ROAD AT 55th STREET	F.A.U. RTE.	SECTION	COUNTY	TOTAL SHEETS / SHEET NO.
		DRAWN -	REVISED -			3562	430Y-N	COOK	12 / 9
	PLOT SCALE = 100.0026 ' / in.	CHECKED -	REVISED -					CONTRACT NO. 60T48	
	PLOT DATE = 8/24/2012	DATE -	REVISED -		SCALE: 1"=50' / SHEET NO. 1 OF 2 SHEETS / STA. 496+00.00 TO STA. 526+00.00		ILLINOIS FED. AID PROJECT		