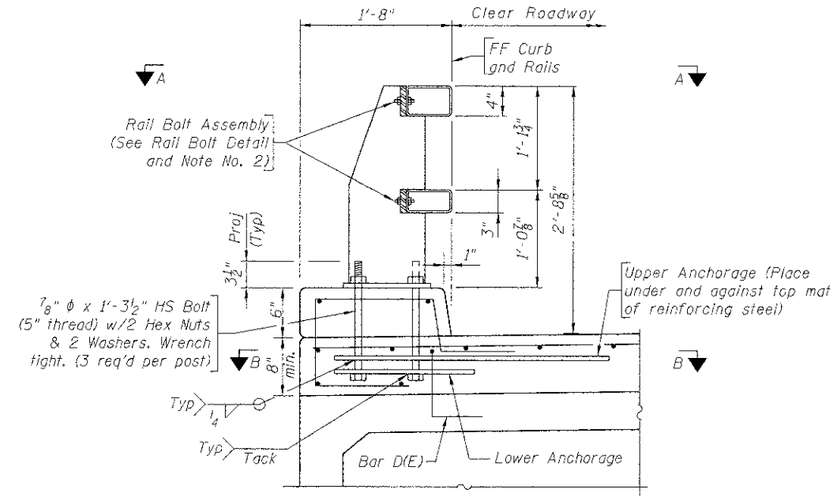

ASSEMBLY DETAIL

(Shown near ℄ Post)
(Bridge slab shown, approach slab similar)

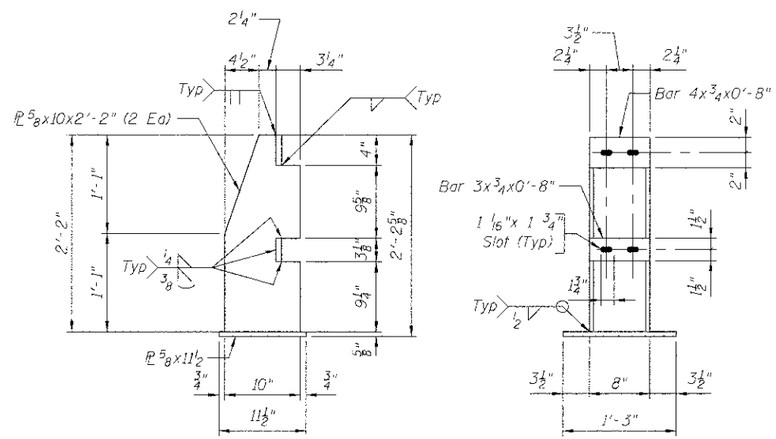

POST DETAILS

(See View A-A for anchor bolt hole spacing)

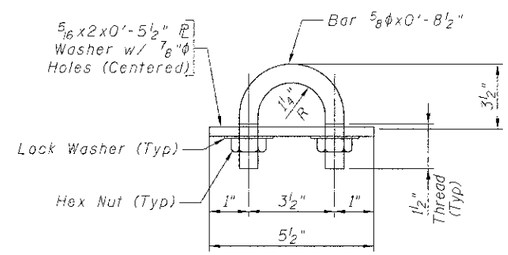

RAIL BOLT DETAIL

Note:
1) Anchor bolts may be tack welded to lower anchorage (Shop or field).
2) At post locations, drill two 1 1/16" ϕ holes in the rails to receive rails bolts (Shop or field). See Post Details for hole spacing
3) Before installing rails, paint all cut, drilled or otherwise damaged surface areas of the railing components with two coats of zinc rich paint conforming to the requirements of ASTM A 780
4) After installing the rails, paint all exposed bolt threads with two coats of zinc rich paint conforming to the requirements of ASTM A 780.
5) Steel components shall be galvanized according to AASHTO M111, unless noted otherwise.
6) Shim Plates shall be provided in accordance with Article 509.05(a) of the Standard Specifications.

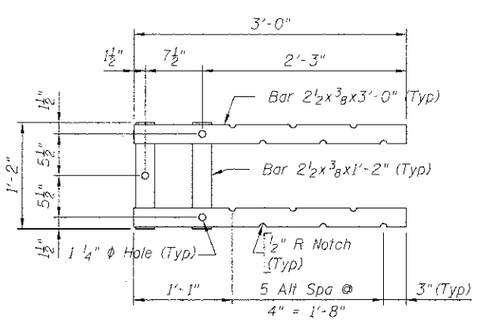

SECTION B-B

(Showing upper anchorage)
(Anchor Bolts and slab not shown)

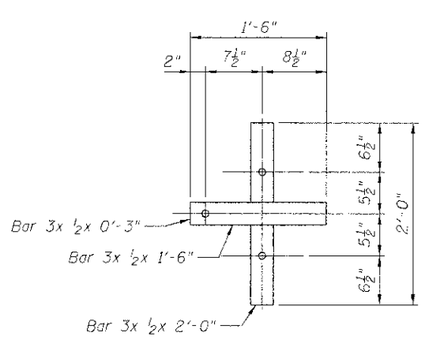

SECTION B-B

(Showing lower anchorage)
(Anchor Bolts and slab not shown)

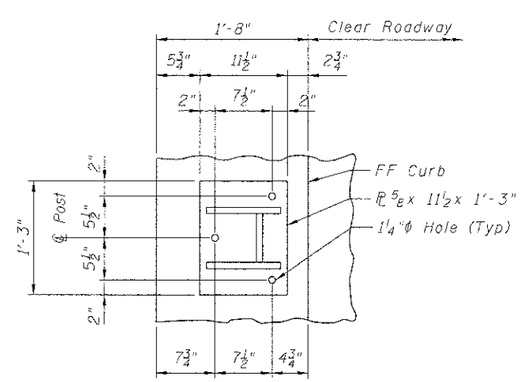

VIEW A-A

(anchor bolts, rails and rail bolts not shown)

BILL OF MATERIAL

Item	Unit	Total
Steel Railing (Special)	Foot	282

FILE NAME = s:\pw\56820-69999\68472\087\micros\cadd sheets\structural\056-3192 63666-009-WRAIL.dgn

STRAND ASSOCIATES® IDFPR NO. 184-001273 — 1170 SOUTH HOUBOLT ROAD, JOLIET, ILLINOIS 60431, (815) 744-4200	USER NAME = briant	DESIGNED RRD	REVISED -
		CHECKED AJS	REVISED -
	PLOT SCALE =	DRAWN BJF	REVISED -
	PLOT DATE = 8/23/2012	CHECKED RRD	REVISED -

MCHENRY COUNTY DIVISION OF TRANSPORTATION
HILL ROAD BRIDGE OVER
NORTH BRANCH NIPPERSINK CREEK

WYOMING 2-TUBE BRIDGE RAILING DETAILS (1 OF 2)
STRUCTURE NO. 056-3192

SHEET NO. 8 OF 27 SHEETS

TR	SECTION	COUNTY	TOTAL SHEETS	SHEET NO.
21	08-00356-00-BR	MCHENRY	77	38
		CONTRACT NO. 63666		
		ILLINOIS FED. AID PROJECT		