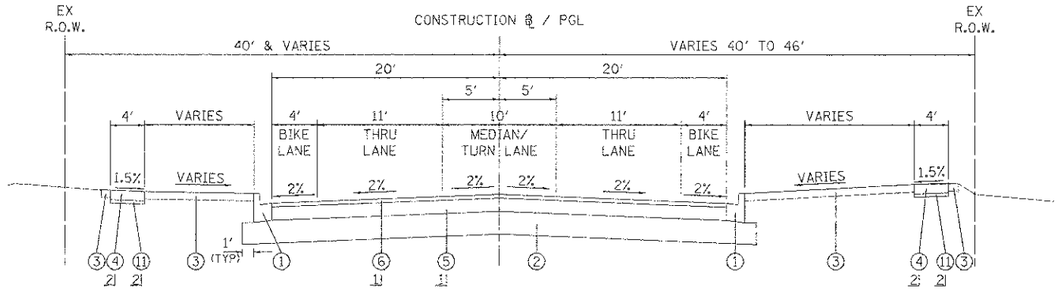

PROPOSED TYPICAL SECTION

WALNUT LANE
STA. 101+15.76 TO STA. 102+22.00
STA. 104+00.00 TO STA. 104+90.27
STA. 105+72.63 TO STA. 105+89.44
STA. 109+11.83 TO STA. 109+39.32
STA. 111+65.04 TO STA. 112+42.86
STA. 113+24.94 TO STA. 114+16.84
STA. 115+22.08 TO STA. 117+43.49
STA. 118+97.51 TO STA. 119+90.66
STA. 120+72.80 TO STA. 121+98.00

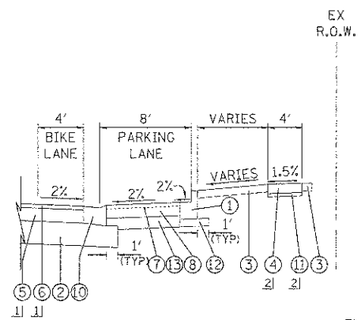

STA. 112+50 TO STA. 120+73

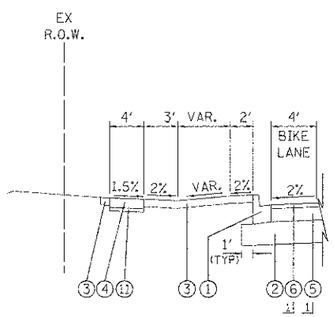

STA. 101+15.76 TO STA. 103+50
STA. 115+00 TO STA. 117+00

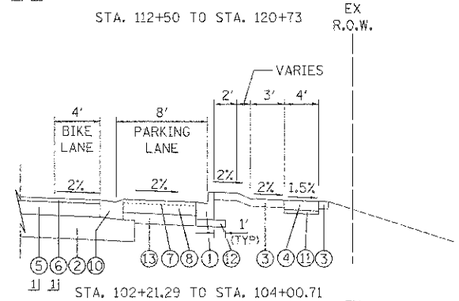

STA. 102+21.29 TO STA. 104+00.71

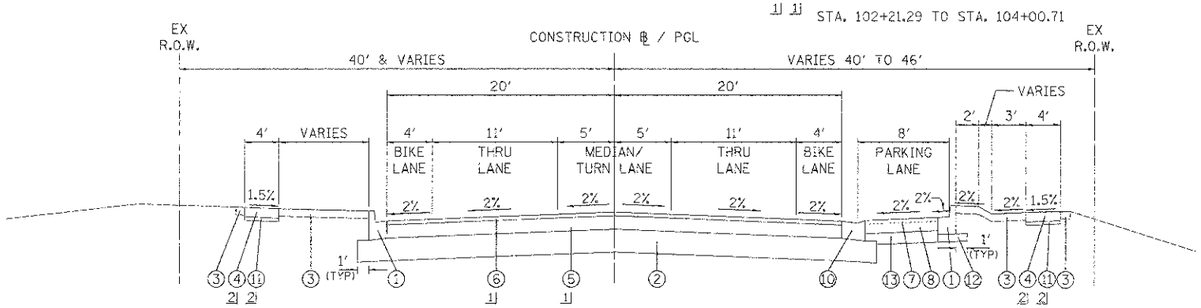

PROPOSED TYPICAL SECTION

WALNUT LANE
STA. 102+22.00 TO STA. 104+00.00
STA. 104+90.27 TO STA. 105+72.63
STA. 105+89.44 TO STA. 109+11.83
STA. 109+39.32 TO STA. 111+65.04
STA. 112+42.86 TO STA. 113+24.94
STA. 117+43.49 TO STA. 118+97.51
STA. 119+90.66 TO STA. 120+72.80

PAVEMENT DESIGN

ADT (2030)	3,300
PV	3,267
SU	0
MU	33
SUBGRADE SUPPORT RATING	POOR
FLEXIBLE TRAFFIC FACTOR	0.132
SELECTED DESIGN PG BINDER	PG 64-22
DESIGN PAVEMENT HMA TEMP.	76° F
DESIGN HMA MODULUS (EAC)	655 KSI
DESIGN HMA MICROSTRAIN	270
MINIMUM PAVEMENT THICKNESS	6"
DESIGN PAVEMENT THICKNESS	9"
SUBGRADE	12"

LEGEND

1. COMBINATION CONCRETE CURB AND GUTTER, TYPE B-6.12 (CUTTER SLOPE 6% UNLESS OTHERWISE NOTED)
2. AGGREGATE SUBGRADE IMPROVEMENT 12"
3. TOPSOIL, FURNISH AND PLACE 4" AND SODDING, SALT TOLERANT
4. P.C.C. SIDEWALK 5 INCH
5. HOT-MIX ASPHALT BINDER COURSE, IL-19.0, N50, 7"
6. HOT-MIX ASPHALT SURFACE COURSE, MIX "D", N50, 2"
7. PAVEMENT FABRIC
8. PORTLAND CEMENT CONCRETE DRIVEWAY PAVEMENT, 6 INCH
9. COMBINATION CONCRETE CURB AND GUTTER, TYPE B-9.12
10. COMBINATION CONCRETE CURB AND GUTTER, TYPE B-6.18
11. SUBBASE GRANULAR MATERIAL, TYPE B 2"
12. SUBBASE GRANULAR MATERIAL, TYPE B 4"
13. SUBBASE GRANULAR MATERIAL, TYPE B 7"
14. PROPOSED MEDIAN SOIL MIX FURNISH AND PLACE

[1] PAID FOR AS HOT-MIX ASPHALT PAVEMENT (FULL DEPTH), 9"

[2] AT LOCATIONS SHOWN ON THE PLANS

HOT-MIX ASPHALT MIXTURE REQUIREMENTS

PAY ITEM	PERCENT AIR VOIDS @ Ndes.
FULL DEPTH PAVEMENT, 9"	
HOT-MIX ASPHALT SURFACE COURSE, MIX "D", N50 (IL 9.5mm), 2"	4% @ 50 GYR.
HOT-MIX ASPHALT BINDER COURSE, IL-19.0, N50, 7" (2 LIFTS)	4% @ 50 GYR.
TEMPORARY PAVEMENT	
TEMP PAVEMENT (HMA BINDER IL-19MM); 6" (2 LIFTS)	4% @ 50 GYR.

NOTES:

1. THE UNIT WEIGHT TO CALCULATE ALL HOT-MIX ASPHALT SURFACE MIXTURES IS 112 LB/SY-IN.
2. THE "AC TYPE" FOR HMA SURFACE MIXES SHALL BE "PG 64-28." THE "AC TYPE" FOR BINDER COURSES SHALL BE "PG 64-22" UNLESS MODIFIED BY DISTRICT ONE SPECIAL PROVISIONS. FOR "PERCENT OF RAP" SEE DISTRICT ONE SPECIAL PROVISIONS.
3. PC CONCRETE TEMPORARY PAVEMENT SHALL CONSIST OF CLASS PV CONCRETE MEETING THE REQUIREMENTS OF ARTICLE 1020 OF THE STANDARD SPECIFICATIONS.

FILE NAME = ...\2556-Typ-Prop-01.dgn	USER NAME = djk	DESIGNED - JSM	REVISED -
		DRAWN - JSM	REVISED -
	PLOT SCALE = 50.0000 ' / in.	CHECKED - DJK	REVISED -
	PLOT DATE = 9/5/2012	DATE - 8/20/2012	REVISED -

STATE OF ILLINOIS
DEPARTMENT OF TRANSPORTATION

WALNUT LANE
PROPOSED TYPICAL SECTIONS

NOT TO SCALE | SHEET NO. 1 OF 2 SHEETS | STA. 101+16.00 TO STA. 121+98.00

F.A.U. RTE.	SECTION	COUNTY	TOTAL SHEETS	SHEET NO.
2556	08-00094-00-PV	COOK	113	13
		CONTRACT NO. 63738		
		ILLINOIS FED. AID PROJECT M-9003(494)		

PROFILE	BY	DATE
SURVEYED		
PLOTTED		
ALIGNMENT CHECKED		
GRADES CHECKED		
H.A. NOTED		
STRUCTURE NOTATIONS CHKD		
NOTE BOOK NO.		

PLAN	BY	DATE
SURVEYED		
PLOTTED		
ALIGNMENT CHECKED		
RT. OF WAY CHECKED		
CADD FILE NAME		
NOTE BOOK NO.		