STATE OF ILLINOIS
DEPARTMENT OF PUBLIC WORKS & BUILDINGS
DIVISION OF HIGHWAYS

ROUTE No.	SEC.	COUNTY	TOTAL SHEETS	SHEET NO.
F.A.I.74	90-14HB-3 -14HB-4 -14VB	TAZEWELL	19	14

ROUTE No.	SEC.	COUNTY	TOTAL SHEETS	SHEET NO.
F.A.I.74	90-14HB-3 -14HB-4 -14VB	TAZEWELL	89	36
FED. ROAD DIST. No.7	ILLINOIS			

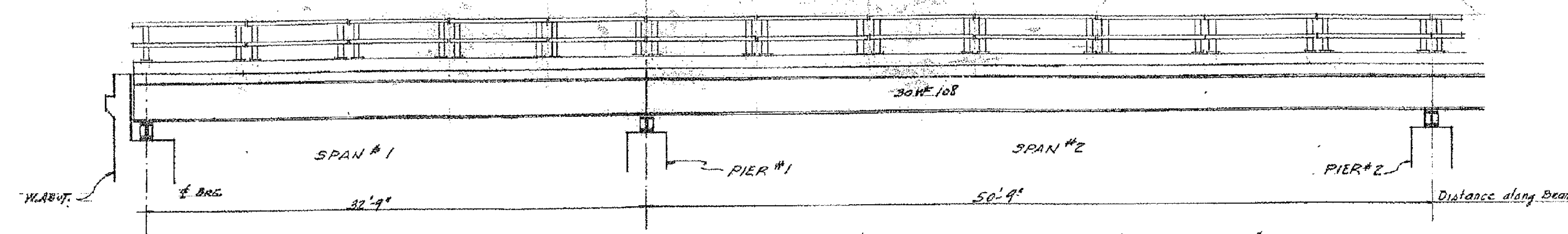

ELEVATION SPANS 1&2
SCALE 1/4" = 1'-0"

SPAN #3 SAME AS SPAN #2
SPAN #4 .. 38'-6"

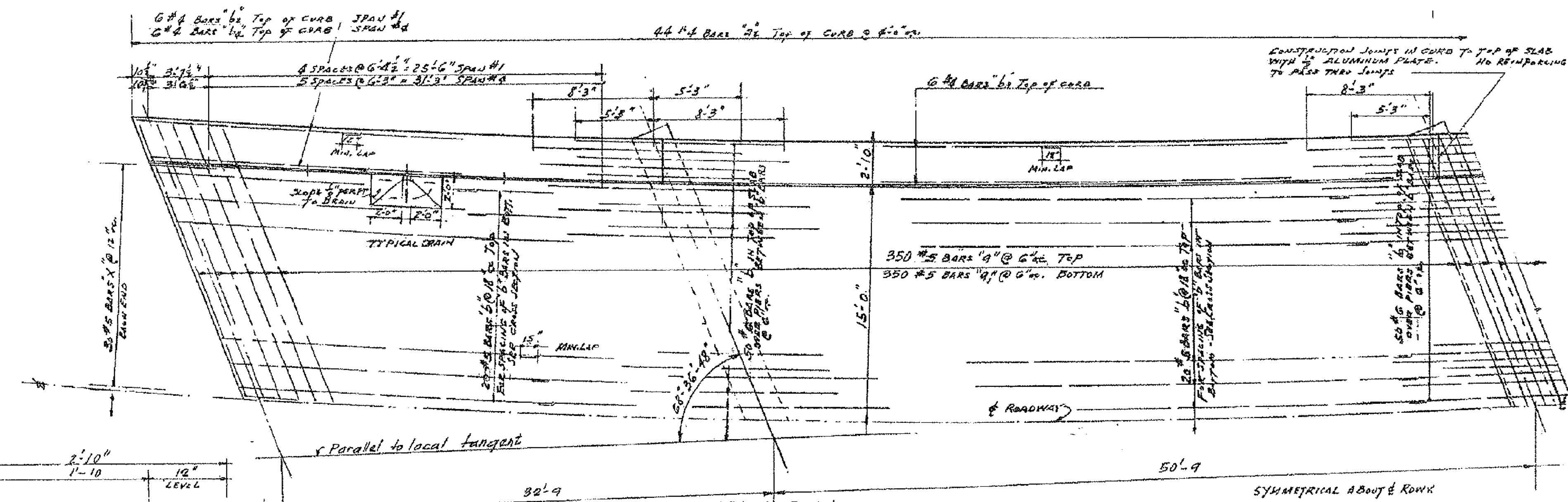

QUARTER PLAN
SCALE 1/4" = 1'-0"

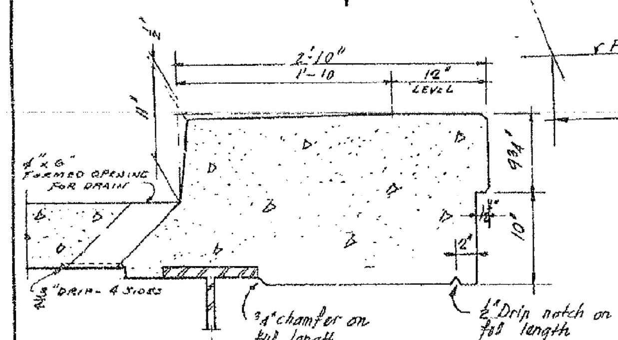

SECTION THRU CURB & DRAIN
SCALE 1½" = 1'-0"

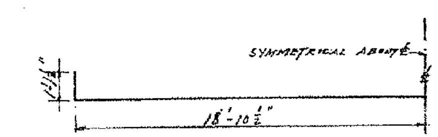

DETAIL "a1" BAR

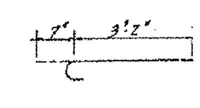

"X" BAR

DIMENSION SCHEDULE

LEFT LANE BRIDGE
NORTH BRIDGE

LOCATION	DIMENSION "A"
W. ABUT.	2'-6¼
PIER #1	1'-8⅞
PIER #2	1'-1⅝
PIER #3	1'-9½
E. ABUT.	1'-8⅝
	DIMENSION "B"
W. ABUT.	2'-9¼
PIER #1	3'-5⅝
PIER #2	3'-8¾
PIER #3	3'-9¾
E. ABUT.	3'-2¾
	DIMENSION "C"
W. ABUT.	3'-7¼
PIER #1	2'-10¾
PIER #2	2'-4¾
PIER #3	2'-6⅞
E. ABUT.	3'-1⅝
	DIMENSION "D"
W. ABUT.	1'-8
PIER #1	2'-3½
PIER #2	2'-8½
PIER #3	2'-5¼
E. ABUT.	1'-9⅝

RIGHT LANE BRIDGE
SOUTH BRIDGE

LOCATION	DIMENSION "A"
W. ABUT.	1'-10½
PIER #1	1'-4¼
PIER #2	1'-1⅞
PIER #3	1'-6
E. ABUT.	2'-2⅞
	DIMENSION "B"
W. ABUT.	3'-4⅛
PIER #1	3'-4¾
PIER #2	3'-8¾
PIER #3	3'-5¾
E. ABUT.	2'-8
	DIMENSION "C"
W. ABUT.	3'-0⅞
PIER #1	2'-6¾
PIER #2	2'-4¾
PIER #3	2'-10¾
E. ABUT.	3'-8⅞
	DIMENSION "D"
W. ABUT.	2'-2¼
PIER #1	2'-7
PIER #2	2'-8
PIER #3	2'-1
E. ABUT.	1'-2¾

BILL OF MATERIAL - THIS SHEET
2 BRIDGES

Bar	No.	Size	Length	Shape
a	700	#6	37'-0"	
a1	700	#6	46'-0"	
a2	176	#6	2'-6"	
b	756	#5	36'-0"	
b1	300	#6	13'-6"	
b2	48	#4	17'-6"	
b3	96	#4	25'-3"	
b4	48	#4	20'-6"	
x	120	#5	5'-9"	
d	700	#4	1'-1"	
Class "X" Concrete			836	Cu. Yds.
Reinforcement Bars			87450	Lbs.
Structural Steel			293740	Lbs.
Metal Handrail			762	Lin. Ft.

FOR INFORMATION ONLY

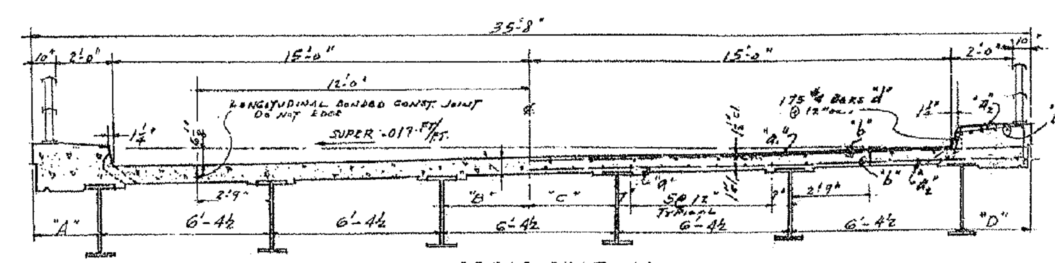

CROSS-SECTION
SCALE 3/8" = 1'-0"

DESIGNED	H.E. Kaufman
CHECKED	H.Y.F.
DRAWN	H.E. Kaufmann
CHECKED	H.Y.F.

EXAMINED ____ ENGINEER OF BRIDGES AND TRAFFIC STRUCTURES
PASSED ____ ENGINEER OF DESIGN
APPROVED ____ CHIEF HIGHWAY ENGINEER

SUPERSTRUCTURE
F.A.I. ROUTE 74 - SECTION 90-14 HB-4
F.A.I. ROUTE 74 OVER F.A. ROUTE 73
STATION 540+01.31
TAZEWELL, COUNTY

WARREN AND VAN PRAAG, INC.
CONSULTING ENGINEERS-DECATUR, ILLINOIS

Alfred Benesch & Company
205 North Michigan Avenue, Suite 2400
Chicago, Illinois 60601
312-565-0450 Job No. 10056

FILE NAME =	USER NAME = mbecker	DESIGNED - MFB	REVISED -
		CHECKED - MRB	REVISED -
0900165_68620_44_exist7.dgn	PLOT SCALE =	DRAWN - PRT	REVISED -
	PLOT DATE = 7/16/2012	CHECKED - MRB	REVISED -

STATE OF ILLINOIS
DEPARTMENT OF TRANSPORTATION

EXISTING PLANS
STRUCTURE NO. 090-0165 / 0166
SHEET NO. SA44 OF SA47 SHEETS

F.A.I. RTE.	SECTION	COUNTY	TOTAL SHEETS	SHEET NO.
74	90-[14R;(14HB-4,14,14HVB)BR]	TAZEWELL	2433	1908
		CONTRACT NO. 68620		
	ILLINOIS FED. AID PROJECT			

x:\10000s\10056\engineering_documents_phase_ii\i155overi74\final\0900165_68620_44_exist7.dgn 10:55:36 AM 7/16/2012