DESIGNER NOTES: 1. Use with District CADD Standards: Slope Drains, Buried Pipe and/or Slope Drains - Exposed Pipe

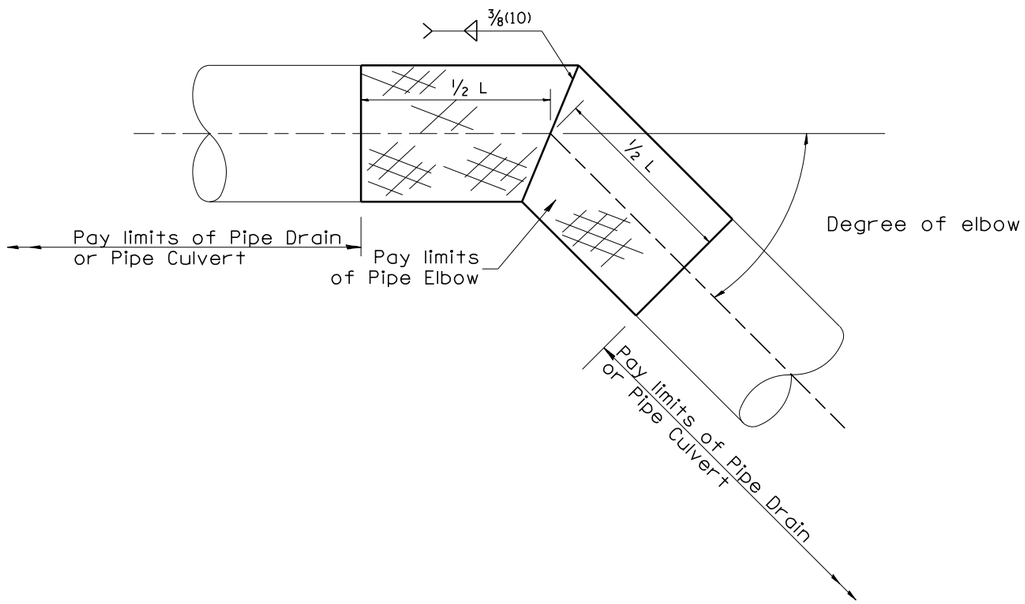

TABLE A		
ELBOW DESIGN CONTROLS		
PIPE DIAMETER	L = Pay limits of Pipe Elbow and minimum length of pipe required for fabrication	
	DEGREE OF ELBOW ≤ 45°	DEGREE OF ELBOW ≥ 46°
12(300)	24(600)	4'(1.22M)
15(375)	24(600)	4'(1.22M)
18(450)	24(600)	4'(1.22M)
21(525)	24(600)	4'(1.22M)
24(600)	4'(1.22M)	4'(1.22M)
30(750)	4'(1.22M)	6'(1.83M)
36(900)	4'(1.22M)	6'(1.83M)

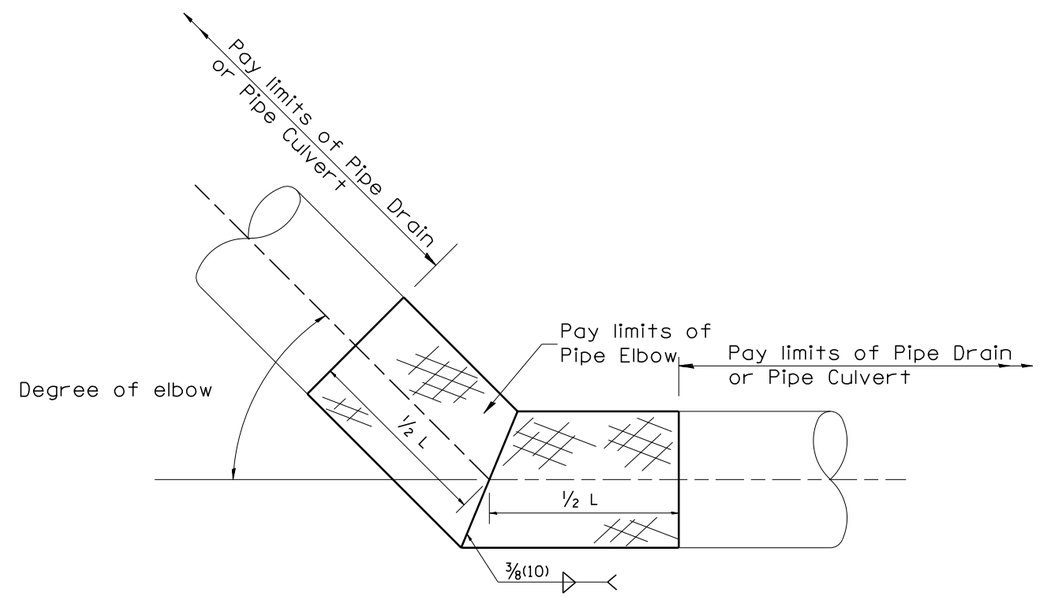

TABLE B	
ELBOW DESIGN CONTROLS	
EARTH SLOPE (V:H)	DEGREE OF ELBOW *
1:6	9°
1:4	14°
1:3	18°
1:2	26°
1:1 1/2	33°

* Approximate - based upon 0.5% inlet and outlet flowlines.

All dimensions are in inches (millimeters) unless otherwise noted.

01-01-97	RENUM. J-11.05, NEW REVISION BOX.	T.P.	
	REVISED TITLE BOX		
10-16-06	REVISED TO 2007 SPEC.	M.A.	

STATE OF ILLINOIS
DEPARTMENT OF TRANSPORTATION

PIPE ELBOW

NOT TO SCALE

CADD STD. 601301-D4

F.A.I RTE.	SECTION	COUNTY	TOTAL SHEETS	SHEET NO.
*	90-[14R;(14HB-4,14,14HVB)BR]	TAZEWELL	2433	2108
		CONTRACT NO. 68620		
FED. ROAD DIST. NO.	ILLINOIS	FED. AID PROJECT		

* 74 & 155