F.A.P. RTE.	SECTION	COUNTY	TOTAL SHEETS	SHEET NO.
729	*	VERMILION	298	157
FED. ROAD DIST. NO.		ILLINOIS	FED. AID PROJECT	

* 36(W,RS-1) & 34Z-2(W,RS)
CONTRACT #90939

NON-COMMERCIAL AND COMMERCIAL URBAN

(WITH 0' TO 2 1/2' (0 mm TO 760 mm) FROM BACK OF CURB TO SIDEWALK)

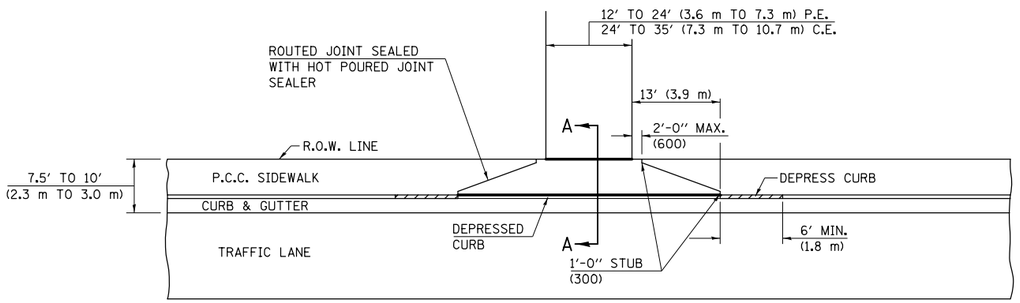

PLAN WITHOUT BOULEVARD

PREFORMED EXPANSION JOINT (FIBER BOARD)

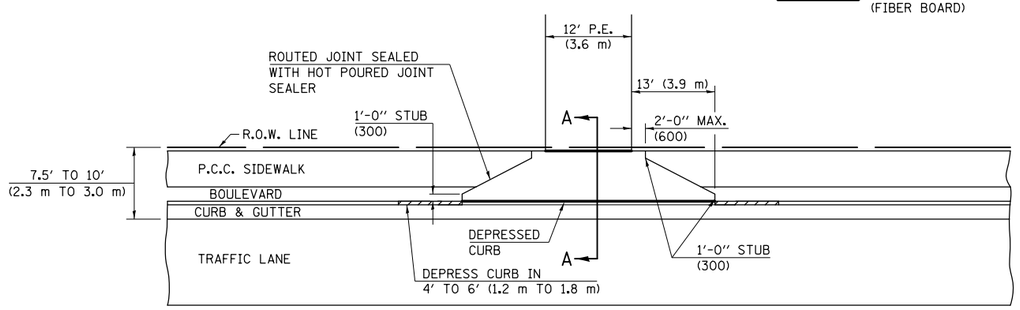

PLAN WITH BOULEVARD

10' TO 15' (3 m TO 4.6 m) FROM TRAVELLED LANE TO RIGHT OF WAY

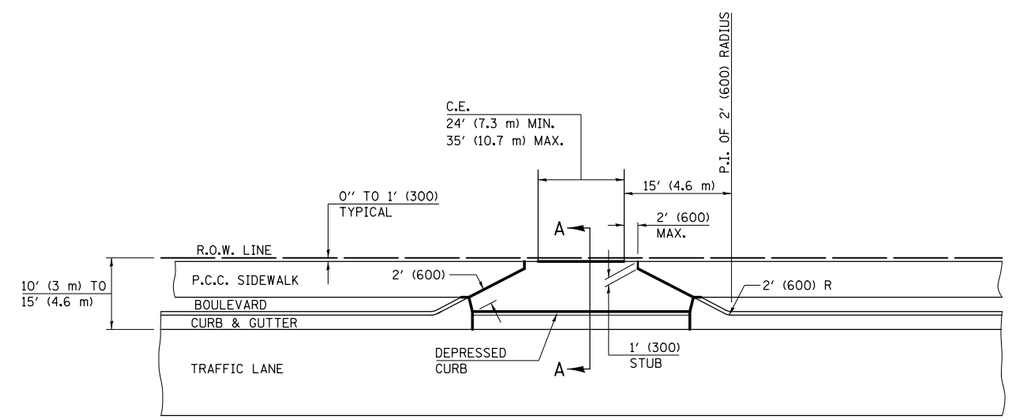

PREFORMED EXPANSION JOINT (FIBER BOARD)

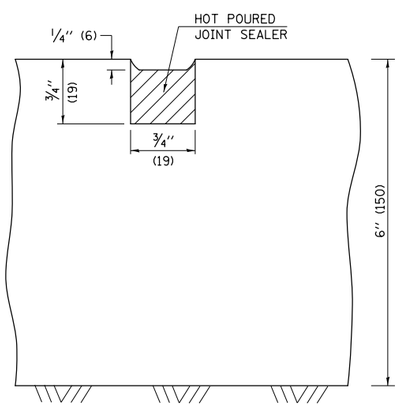

DETAIL OF SAWED OR ROUTED JOINT

THICKEN SIDEWALK TO 6" (150 mm) (MIN.) WITHIN LIMITS OF DEPRESSED CURB.

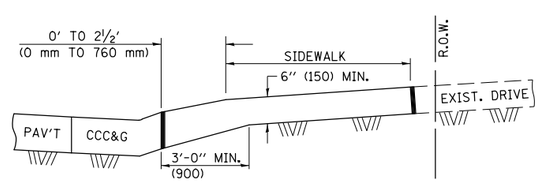

SECTION A-A

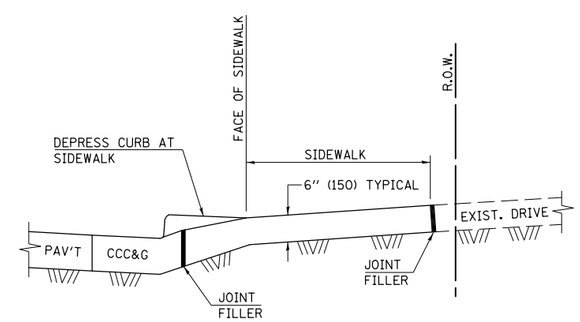

SECTION A-A
WITH SIDEWALK

GENERAL NOTES

1. THIS LONGITUDINAL CURB EXPANSION JOINT SHALL BE PLACED ONLY WHERE THE PROPOSED P.C. CONCRETE SIDEWALK OR DRIVEWAY PAVEMENT MEETS AN EXISTING CONCRETE ENTRANCE.
2. THE LONGITUDINAL CURB EXPANSION JOINT SHALL CONFORM TO SECTION 1051 OF THE STANDARD SPECIFICATIONS.
3. THICKEN SIDEWALK FROM 5" TO 6" (127 mm TO 150 mm) WITHIN DRIVEWAY LIMITS OF DRIVEWAY.

NOTE: WHEN EXISTING SIDEWALK IS TO REMAIN IN PLACE, THE JOINT FILLER IS TO BE PLACED AT THE FACE OF SIDEWALK.

NOTE: THICKEN SIDEWALK FROM 5" (125) TO 6" (150) WITHIN LIMITS OF DRIVEWAY FLARE [15' (4.6 m) EITHER SIDE OF DRIVEWAY].

REVISIONS	
NAME	DATE
TJB	11/06
NJF	6/10

ILLINOIS DEPARTMENT OF TRANSPORTATION

SPECIAL DETAILS

DRAWN BY TD

DATE AUGUST 2003 CHECKED BY AWM

8/17/2012

c:\pw_work\pwidot\cearlockjd\d0313241\20003z001.dgn