CONTRACT NO. 60C19

FAP RTE.	SECTION	COUNTY	TOTAL SHEETS	SHEET NO.
338	114 BY-R-1	WILL	139	66
STA.		TO STA.		
FED. ROAD DIST. NO.	ILLINOIS	FED. AID PROJECT		

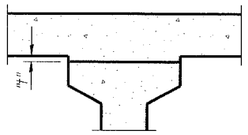

To determine "4": After all precast prestressed beams have been erected, elevations of the top flanges of the beams shall be taken at intervals shown below. These elevations subtracted from the "Theoretical Grade Elevations Adjusted for Dead Load Deflections" shown below, minus slab thickness, equals the fillet heights "4" above top flanges of beams.

FILLET HEIGHTS

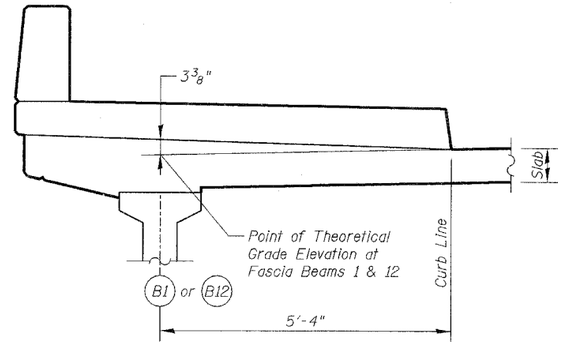

SECTION THRU SIDEWALK

BEAM 1

Location	Station	Offset	Theoretical Grade Elevations	Theoretical Grade Elevations Adjusted For Dead Load Deflection
Bk. S. Abut.	3208+80.76	-40.33	602.97	602.97
℄ Brg. S. Abut	3208+82.12	-40.33	602.95	602.95
A	3208+92.12	-40.33	602.82	602.86
B	3209+02.12	-40.33	602.70	602.76
C	3209+12.12	-40.33	602.58	602.66
D	3209+22.12	-40.33	602.45	602.54
E	3209+32.12	-40.33	602.33	602.41
F	3209+42.12	-40.33	602.20	602.26
G	3209+52.12	-40.33	602.08	602.11
S. Brg. Pier 1	3209+61.37	-40.33	601.97	601.97
℄ Pier 1	3209+62.12	-40.33	601.96	601.96
N. Brg. Pier 1	3209+62.87	-40.33	601.95	601.95
H	3209+72.87	-40.33	601.82	601.85
I	3209+82.87	-40.33	601.70	601.76
J	3209+92.87	-40.33	601.57	601.65
K	3210+02.87	-40.33	601.45	601.53
L	3210+12.87	-40.33	601.33	601.40
M	3210+22.87	-40.33	601.20	601.26
N	3210+32.87	-40.33	601.08	601.11
S. Brg. Pier 2	3210+41.37	-40.33	600.97	600.97
℄ Pier 2	3210+42.12	-40.33	600.96	600.96
N. Brg. Pier 2	3210+42.87	-40.33	600.95	600.95
O	3210+52.87	-40.33	600.83	600.86
P	3210+62.87	-40.33	600.71	600.77
Q	3210+72.87	-40.33	600.58	600.67
R	3210+82.87	-40.33	600.46	600.55
S	3210+92.87	-40.33	600.33	600.42
T	3211+02.87	-40.33	600.21	600.27
U	3211+12.87	-40.33	600.09	600.12
℄ Brg. N. Abut	3211+22.12	-40.33	599.97	599.97
Bk. N. Abut.	3211+23.48	-40.33	599.96	599.96

BEAM 2

Location	Station	Offset	Theoretical Grade Elevations	Theoretical Grade Elevations Adjusted For Dead Load Deflection
Bk. S. Abut.	3208+77.65	-33.00	603.16	603.16
℄ Brg. S. Abut	3208+79.01	-33.00	603.14	603.14
A	3208+89.01	-33.00	603.02	603.05
B	3208+99.01	-33.00	602.89	602.96
C	3209+09.01	-33.00	602.77	602.85
D	3209+19.01	-33.00	602.64	602.73
E	3209+29.01	-33.00	602.52	602.60
F	3209+39.01	-33.00	602.40	602.46
G	3209+49.01	-33.00	602.27	602.30
S. Brg. Pier 1	3209+58.26	-33.00	602.16	602.16
℄ Pier 1	3209+59.01	-33.00	602.15	602.15
N. Brg. Pier 1	3209+59.76	-33.00	602.14	602.14
H	3209+69.76	-33.00	602.01	602.05
I	3209+79.76	-33.00	601.89	601.95
J	3209+89.76	-33.00	601.77	601.84
K	3209+99.76	-33.00	601.64	601.73
L	3210+09.76	-33.00	601.52	601.59
M	3210+19.76	-33.00	601.39	601.45
N	3210+29.76	-33.00	601.27	601.30
S. Brg. Pier 2	3210+38.26	-33.00	601.17	601.17
℄ Pier 2	3210+39.01	-33.00	601.16	601.16
N. Brg. Pier 2	3210+39.76	-33.00	601.15	601.15
O	3210+49.76	-33.00	601.02	601.06
P	3210+59.76	-33.00	600.90	600.96
Q	3210+69.76	-33.00	600.77	600.86
R	3210+79.76	-33.00	600.65	600.74
S	3210+89.76	-33.00	600.53	600.61
T	3210+99.76	-33.00	600.40	600.47
U	3211+09.76	-33.00	600.28	600.31
℄ Brg. N. Abut	3211+19.01	-33.00	600.16	600.16
Bk. N. Abut.	3211+20.37	-33.00	600.15	600.15

BEAM 3

Location	Station	Offset	Theoretical Grade Elevations	Theoretical Grade Elevations Adjusted For Dead Load Deflection
Bk. S. Abut.	3208+74.54	-25.67	603.35	603.35
℄ Brg. S. Abut	3208+75.90	-25.67	603.33	603.33
A	3208+85.90	-25.67	603.21	603.24
B	3208+95.90	-25.67	603.08	603.15
C	3209+05.90	-25.67	602.96	603.04
D	3209+15.90	-25.67	602.84	602.93
E	3209+25.90	-25.67	602.71	602.79
F	3209+35.90	-25.67	602.59	602.65
G	3209+45.90	-25.67	602.46	602.49
S. Brg. Pier 1	3209+55.15	-25.67	602.35	602.35
℄ Pier 1	3209+55.90	-25.67	602.34	602.34
N. Brg. Pier 1	3209+56.65	-25.67	602.33	602.33
H	3209+66.65	-25.67	602.21	602.24
I	3209+76.65	-25.67	602.08	602.14
J	3209+86.65	-25.67	601.96	602.04
K	3209+96.65	-25.67	601.83	601.92
L	3210+06.65	-25.67	601.71	601.79
M	3210+16.65	-25.67	601.59	601.64
N	3210+26.65	-25.67	601.46	601.49
S. Brg. Pier 2	3210+35.15	-25.67	601.36	601.36
℄ Pier 2	3210+35.90	-25.67	601.35	601.35
N. Brg. Pier 2	3210+36.65	-25.67	601.34	601.34
O	3210+46.65	-25.67	601.21	601.25
P	3210+56.65	-25.67	601.09	601.15
Q	3210+66.65	-25.67	600.97	601.05
R	3210+76.65	-25.67	600.84	600.93
S	3210+86.65	-25.67	600.72	600.80
T	3210+96.65	-25.67	600.59	600.66
U	3211+06.65	-25.67	600.47	600.50
℄ Brg. N. Abut	3211+15.90	-25.67	600.36	600.36
Bk. N. Abut.	3211+17.26	-25.67	600.34	600.34

BEAM 4

Location	Station	Offset	Theoretical Grade Elevations	Theoretical Grade Elevations Adjusted For Dead Load Deflection
Bk. S. Abut.	3208+71.42	-18.33	603.54	603.54
℄ Brg. S. Abut	3208+72.78	-18.33	603.52	603.52
A	3208+82.78	-18.33	603.40	603.43
B	3208+92.78	-18.33	603.28	603.34
C	3209+02.78	-18.33	603.15	603.24
D	3209+12.78	-18.33	603.03	603.12
E	3209+22.78	-18.33	602.90	602.99
F	3209+32.78	-18.33	602.78	602.84
G	3209+42.78	-18.33	602.66	602.69
S. Brg. Pier 1	3209+52.03	-18.33	602.54	602.54
℄ Pier 1	3209+52.78	-18.33	602.53	602.53
N. Brg. Pier 1	3209+53.53	-18.33	602.52	602.52
H	3209+63.53	-18.33	602.40	602.43
I	3209+73.53	-18.33	602.27	602.33
J	3209+83.53	-18.33	602.15	602.23
K	3209+93.53	-18.33	602.03	602.11
L	3210+03.53	-18.33	601.90	601.98
M	3210+13.53	-18.33	601.78	601.83
N	3210+23.53	-18.33	601.65	601.68
S. Brg. Pier 2	3210+32.03	-18.33	601.55	601.55
℄ Pier 2	3210+32.78	-18.33	601.54	601.54
N. Brg. Pier 2	3210+33.53	-18.33	601.53	601.53
O	3210+43.53	-18.33	601.41	601.44
P	3210+53.53	-18.33	601.28	601.35
Q	3210+63.53	-18.33	601.16	601.24
R	3210+73.53	-18.33	601.03	601.12
S	3210+83.53	-18.33	600.91	600.99
T	3210+93.53	-18.33	600.79	600.85
U	3211+03.53	-18.33	600.66	600.69
℄ Brg. N. Abut	3211+12.78	-18.33	600.55	600.55
Bk. N. Abut.	3211+14.14	-18.33	600.53	600.53

DWG. S-07 of 34

REVISIONS	
NAME	DATE

ILLINOIS DEPARTMENT OF TRANSPORTATION

TOP OF SLAB ELEVATIONS

ILLINOIS ROUTE 59 OVER DuPAGE RIVER
FAP ROUTE 338 SECTION 114 BY-R-1
WILL COUNTY
STATION 3209+85.00
STRUCTURE NUMBER 099-0339

SCALE: NONE | DESIGNED BY: TB | DRAWN BY: TB
DATE: 08/17/07 | CHECKED BY: WPM | CHECKED BY: TL

KNIGHT
Engineers & Architects

FILE: L:\6632.01\Cad\Sheets\Roadway Structures\Bridge\66320-S0339-DE02.dgn