STATE OF ILLINOIS
DEPARTMENT OF TRANSPORTATION

ROUTE NO.	SECTION	COUNTY	TOTAL SHEETS	SHEET NO.
F.A.P. 721	(113BR) BR	DEWITT	81	34
FED. ROAD DIST. NO. 7	ILLINOIS	FED. AID PROJECT-		

SHEET NO. 9
18 SHEETS

Contract #70232

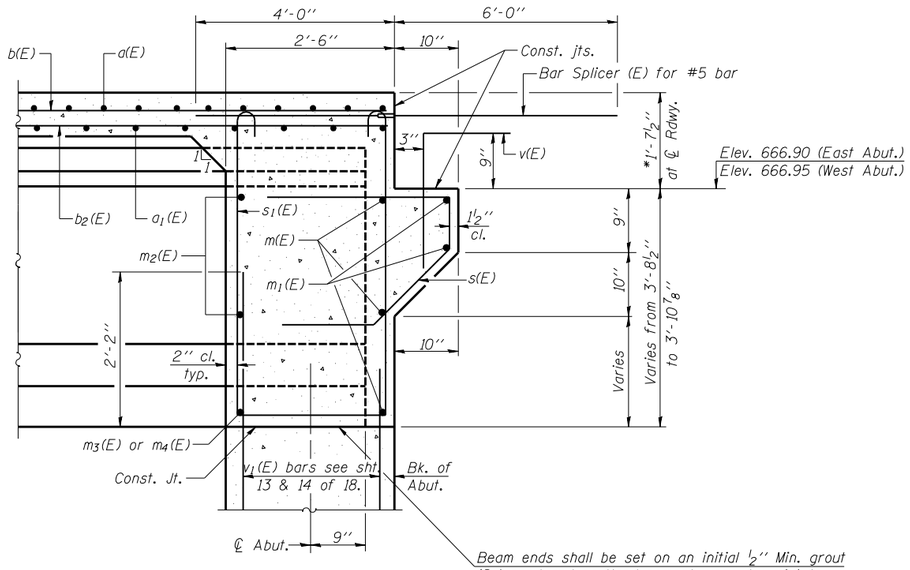

Beam ends shall be set on an initial ½" Min. grout (2:1 sand and portland cement, very dry mix) to provide full bearing. Any excess grout squeezed out from under the beam shall be removed. Cost included with Concrete Structures.

SECTION A-A

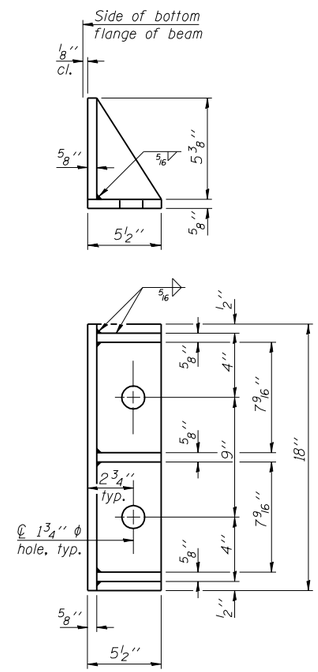

SIDE RETAINER

Equivalent rolled angle with stiffeners will be allowed in lieu of welded plates.

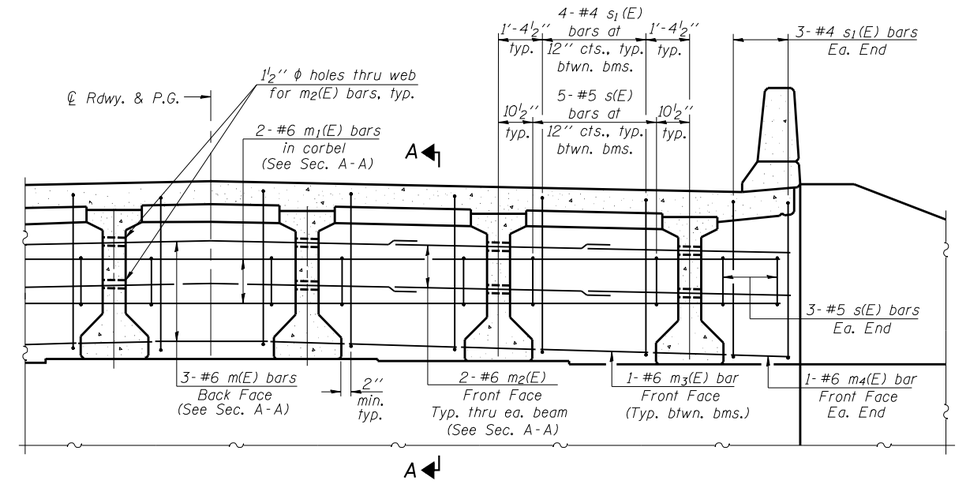

DIAPHRAGM ELEVATION AT WEST ABUTMENT

(Looking West-East Abut. similar)

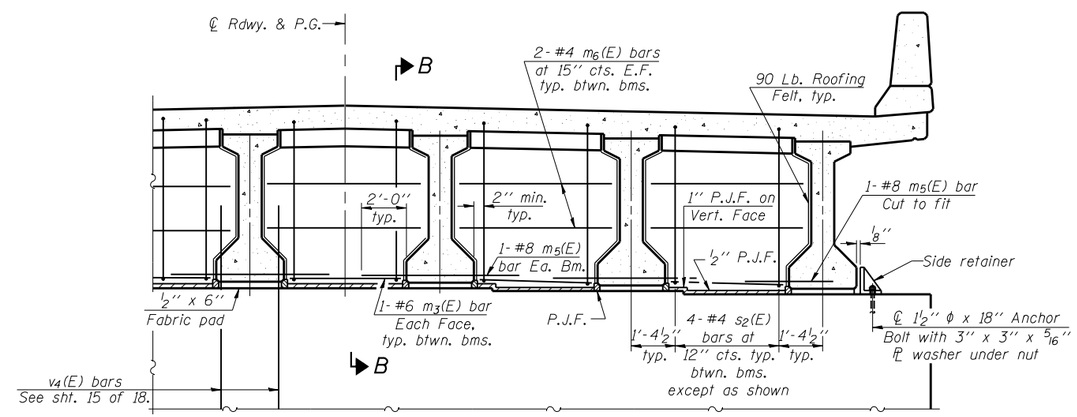

DIAPHRAGM ELEVATION AT PIER

(Looking East)

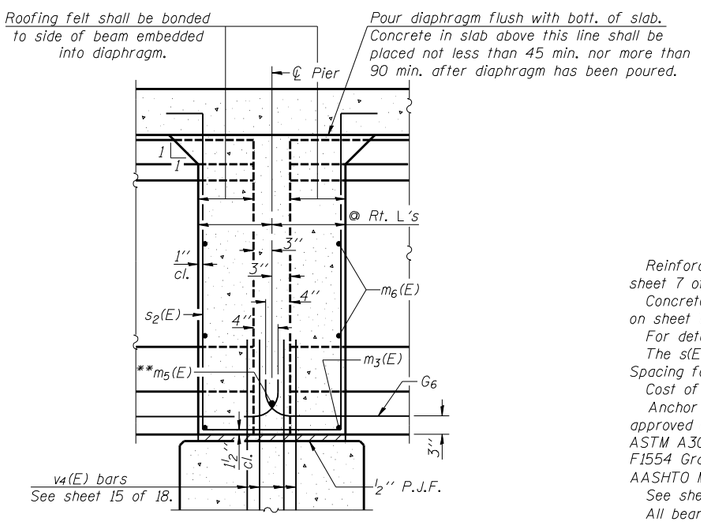

SECTION B-B

Dimensions along ℄ of beam, except as shown.

**Tightly fasten the #8 bars together with No. 9 wire ties.

Reinforcement bars in diaphragm are billed with superstructure on sheet 7 of 18.

Concrete in diaphragm is included with Concrete Superstructure on sheet 7 of 18.

For details of bars s(E), s_1(E) and s_2(E) see sheet 7 of 18.

The s(E), s_1(E) and s_2(E) bars shall be placed parallel to the beams. Spacing for these bars shall be at right angles to the beams.

Cost of 90 Lb. roofing felt is included with Concrete Superstructure.

Anchor bolts shall be ASTM F1554 all-thread (or an Engineer-approved alternate material) of the grade(s) and diameter(s) specified. ASTM A307 Grade C anchor bolts may be used in lieu of ASTM F1554 Grade 36 (Fy=36ksi). The corresponding specified grade of AASHTO M314 anchor bolts may be used in lieu of ASTM F1554.

See sheet 16 of 18 for anchor bolt details.

All bearing plates, side retainers, anchor bolts, nuts and washers shall be galvanized according to AASHTO M111 or M232 (as applicable).

Anchor bolts for side retainers may be cast in place or installed in holes drilled before deck pour and after members are in place.

Drilled and set anchor bolts shall be installed according to Article 521.06 of the Standard Specifications.

Cost of side retainer and anchor bolts shall be included with Concrete Structure.

MIN. BAR LAP

#6 bar = 2'-9"

*Prior to grinding

DESIGNED	Phillip R. Litchfield
CHECKED	Nick R. Barnett
DRAWN	R. Sommer
CHECKED	P.R.L./N.R.B.

September 6 2007
EXAMINED Thomas J. Domagalski
ENGINEER OF BRIDGE DESIGN
PASSED Ralph E. Anderson
ENGINEER OF BRIDGES AND STRUCTURES

DIAPHRAGM DETAILS
F.A.P. ROUTE 721 - SECTION (113BR)BR
DEWITT COUNTY
STATION 244+07.00
STRUCTURE NO. 020-0062