CONTRACT NO. 72891

| F.A.P. RTE. | SECTION | COUNTY | TOTAL SHEETS | SHEET NO. |
|---|---|---|---|---|
| 304 | 2(B-5,B-6) | Pike | 112 | 65 |
| STA. | | TO STA. | | |
| FED. ROAD DIST. NO. 6 | ILLINOIS | FED. AID PROJECT | | |

SN075-0509 Sheet 7 of 17

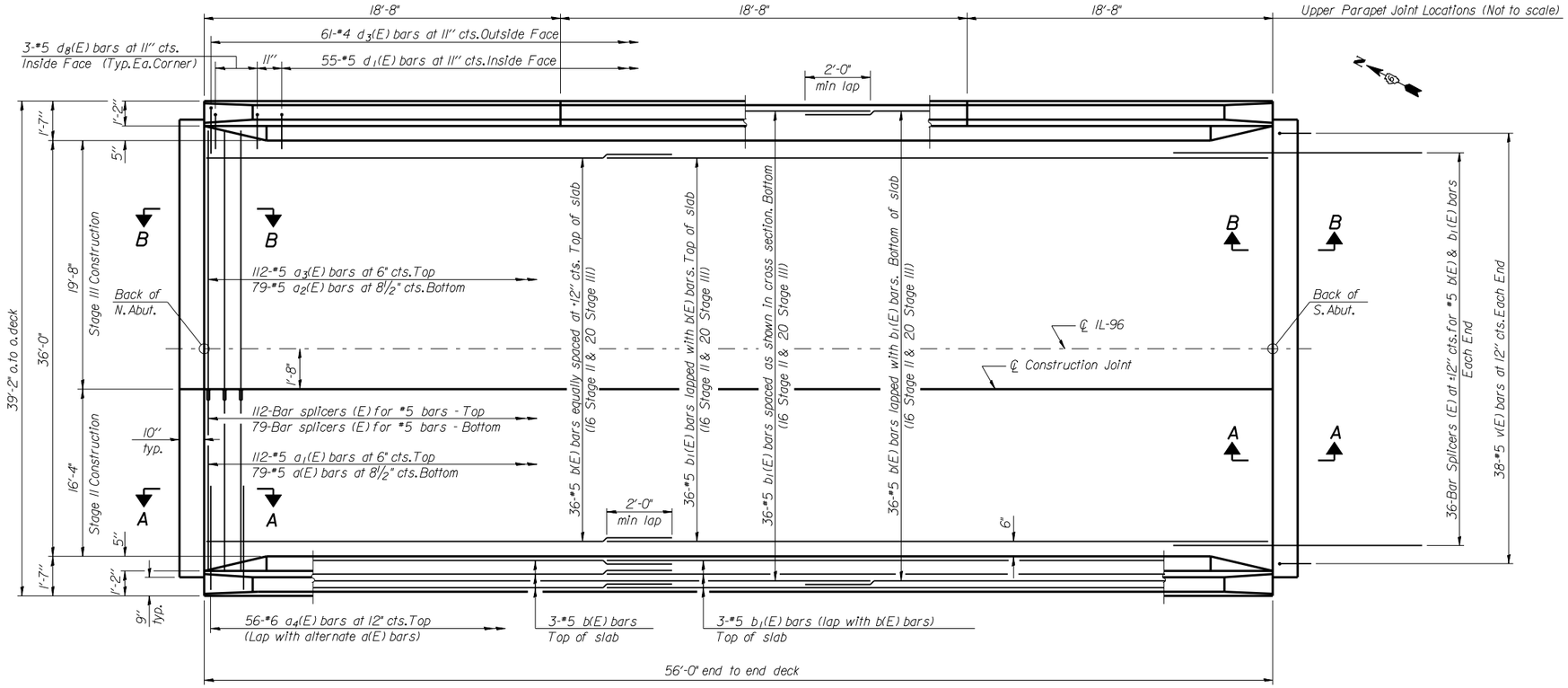


## PLAN

Notes:
See Sheet 9 of 17 for Superstructure Details and Bill of Material.
Reinforcement bars designated (E) shall be epoxy coated.
See Sheet 9 of 17 for parapet reinforcement.
See Sheet 14 of 17 for Sections A-A and B-B

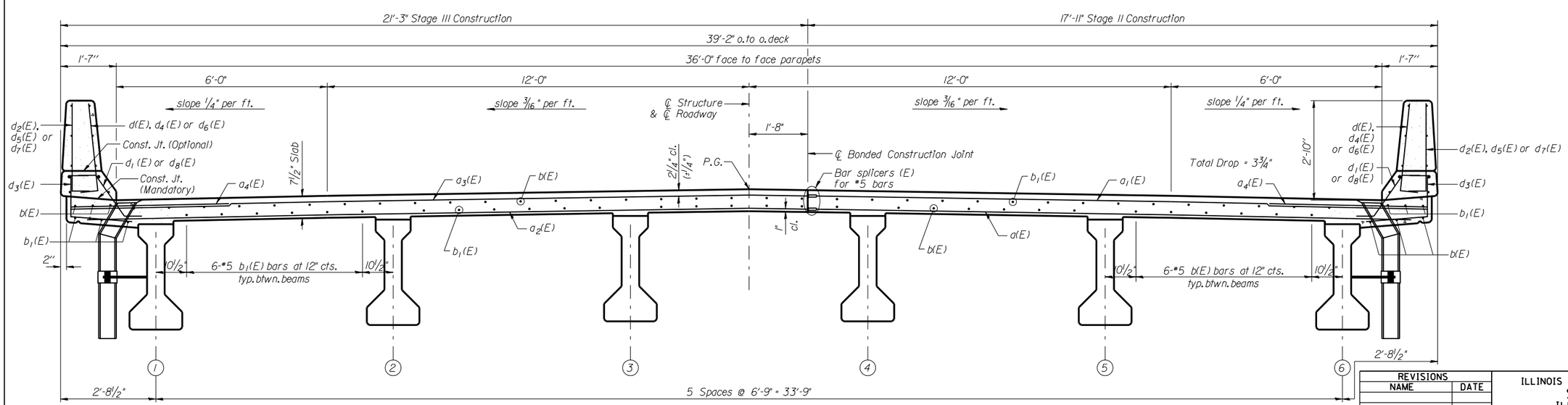


NORTH HALF

SOUTH HALF

## CROSS SECTION

(Looking South)

| REVISIONS | |
|---|---|
| NAME | DATE |
| | |

ILLINOIS DEPARTMENT OF TRANSPORTATION
SUPERSTRUCTURE
ILLINOIS ROUTE 96 OVER
BROWN CREEK
PIKE COUNTY
FAP RTE 304 - SECTION 2(B-5,B-6)
STATION 456+34.50
STRUCTURE NO. 075-0509

SCALE: N/A DRAWN BY JLS
DATE SEPT 2007 CHECKED BY DSP

PLOT DATE = Sep-26-2007 02:53:42PM
FILE NAME = c:\projects\d652484\psbs_final\sn075-0040\v-050181 brown bridge plans 9-26-07.dgn
PLOT SCALE = 01.000000 '/' IN.
USER NAME = laughlirl