ROUTE NO.	SEC	COUNTY	TOTAL SHEETS	SHEET NO.
FAP 614	*	MORGAN	14	7
FED. ROAD DIST. NO. 7	ILLINOIS	PROJECT		

SHEET NO. 5
12 SHEETS

*148(BR-2)F

CONTRACT NO. 72B49

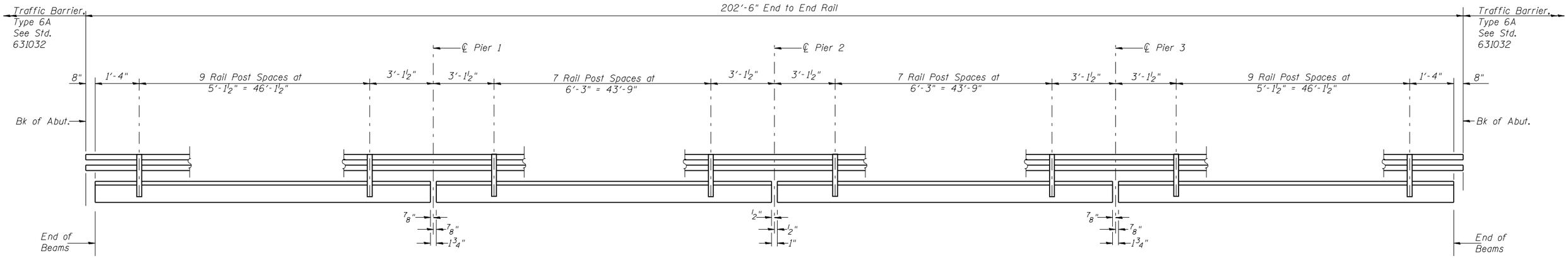

RAIL POST SPACING

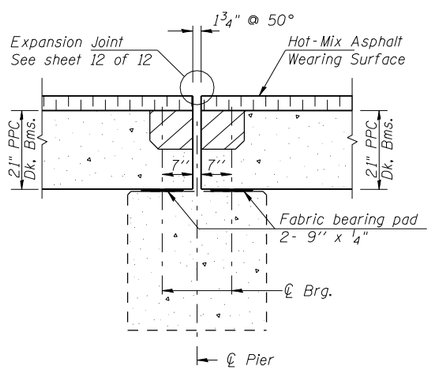

SECTION THRU EXP. PIERS 1 & 3

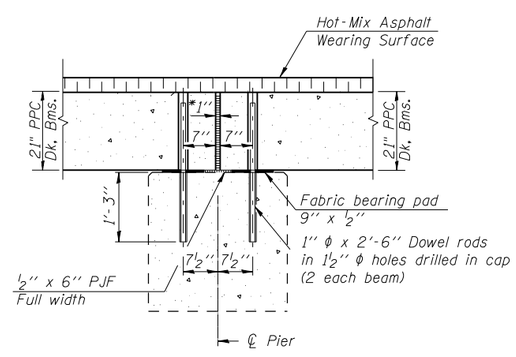

SECTION THRU FIXED PIER 2

* 1" Jt. shall be filled with non-shrink grout. 1" dimension may vary to accommodate tolerance in beam lengths.

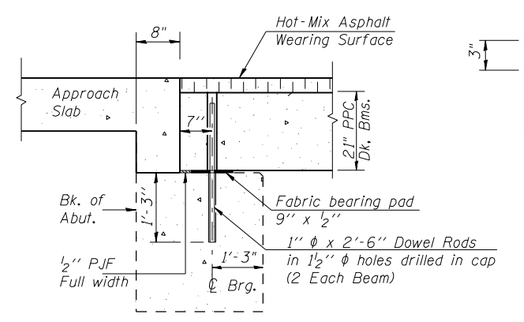

SECTION THRU ABUTMENT

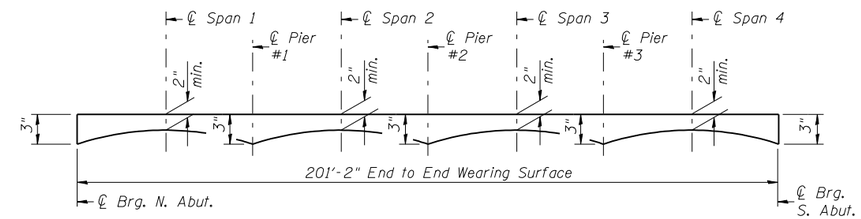

HOT-MIX ASPHALT WEARING SURFACE PROFILE

(Includes Waterproofing Membrane System)

THIS SHEET IS FOR INFORMATION ONLY

Notes :

Existing dowel rods shall be burned off flush with top of existing concrete, ground smooth and sealed with epoxy. Cost included in cost of removal of existing superstructures. After beams have been erected, holes shall be drilled into substructure and anchor dowels placed. Dowel holes shall be filled with non-shrink grout to top of beam and allowed to cure min. 24 hrs. prior to grouting the shear keys.

All horizontal dimensions are at right angles to beam ends. See sheet 3 of 12 for bearing pad details.

Hatched areas to be poured after beams have been erected and joints grouted. Ends of beams shall be aligned at the expansion joints. Any lineal variation in beam lengths shall be placed at the fixed joint.

DESIGNED	BAN
CHECKED	JOH
DRAWN	TC/TD
CHECKED	BAN

RAIL POST SPACING,
HMA WS PROFILE &
SUBSTRUCTURE SECTIONS
ILLINOIS ROUTE 78 OVER
MAUVAISE TERRE CREEK
F.A.P. 614 SEC. 148(BR-2)F
MORGAN COUNTY
STATION 16+34.85
STR. NO. 069-0005

HUTCHISON ENGINEERING, INC.
JACKSONVILLE, ILLINOIS

Rev: Date:

2447-6b005