CONTRACT NO. 74249

F.A.I. RTE.	SECTION	COUNTY	TOTAL SHEETS	SHEET NO.
57	*	VARIOUS	44	16

STA. 5444+35.70 TO STA. 5444+85.70

FED. ROAD DIST. NO. _ ILLINOIS FED. AID PROJECT

* D7 SAFETY 2008-2

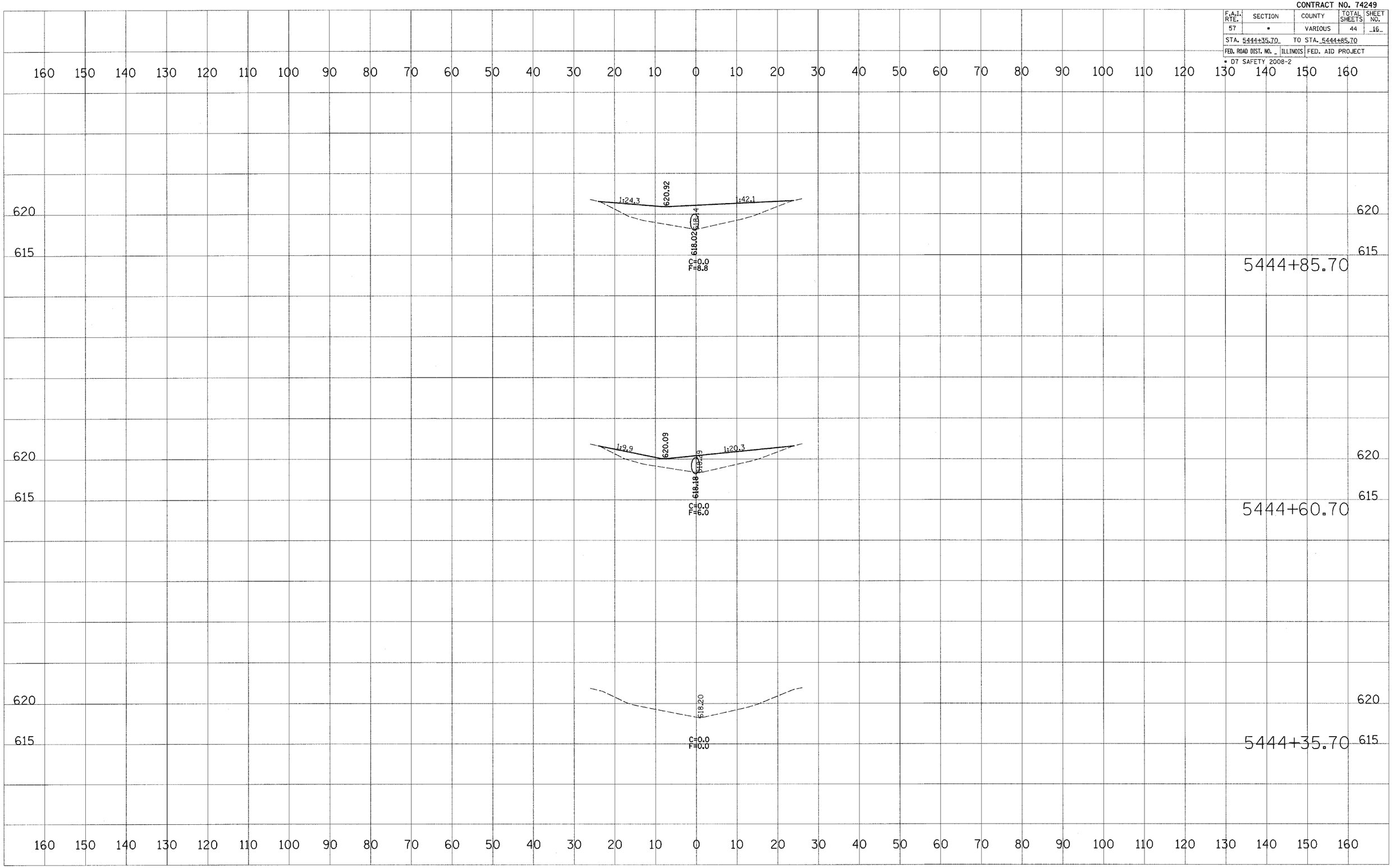

FINAL SURVEY | NOTE BOOK NO. | SURVEYED | PLOTTED | TEMPLATE | AREAS | AREAS CHECKED | BY | DATE

ORIGINAL SURVEY | NOTE BOOK NO. | SURVEYED | PLOTTED | TEMPLATE | AREAS | AREAS CHECKED | BY | DATE

PLOT DATE = 8/9/2007
FILE NAME = c:\projects\74249d\xsheet0056.74249d
PLOT SCALE = 10.0000 ' / IN.
USER NAME = davisonjl

S.N. 025-0056