ROUTE NO.	SECTION	COUNTY	TOTAL SHEETS	SHEET NO.
TR 434	*	IROQUOIS	23	10
FED. ROAD DIST. NO. 7	ILLINOIS	PROJECT BROS-075(131)		

*06-26102-01-BR CONTRACT #87356

SHEET NO. 4 OF 11 SHEETS

FOR RAIL POST SPACING SEE SH.#5 OF 11

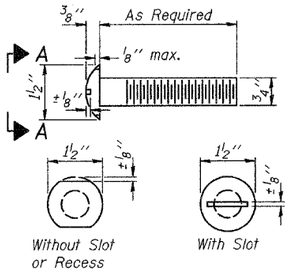

VIEW A-A
ROUND HEAD BOLT

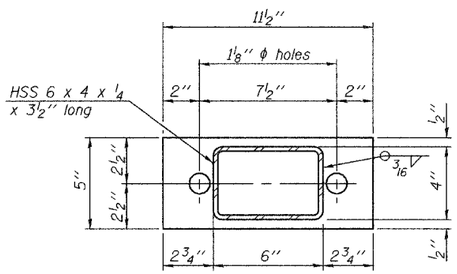

PL 1/2" x 11 1/2" x 5"

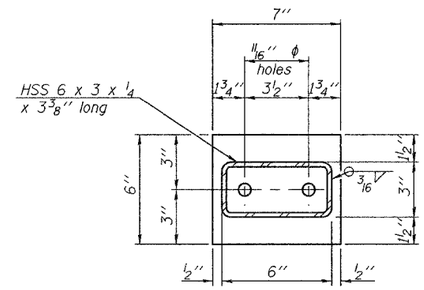

PL 1/2" x 7" x 6"

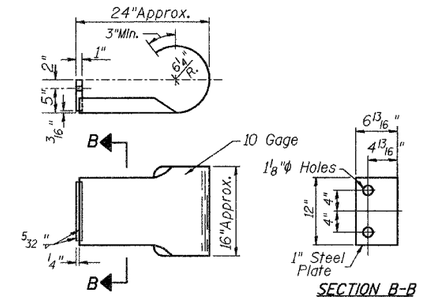

CURLED END SECTION

(4 Req'd) Cost Included with Steel Railing, Type S-1. Terminal Markers - Direct Applied shall be placed on end of each Curled End Section. (Each Corner)

NOTES

All field drilled holes shall be coated with an approved zinc rich paint before erection.

For multi-span bridges, sufficient 1/4" x 6" x 1'-2" galvanized steel shims shall be provided to align rail between adjacent spans. Cost included with Steel Railing, Type S-1.

All steel rail elements shall be galvanized according to Article 509.05 of the Standard Specifications.

*** The studs of the anchor devices shall be placed below the top reinforcement bars and the outermost longitudinal reinforcement bar shall be placed directly above the studs of the rail post anchor device.

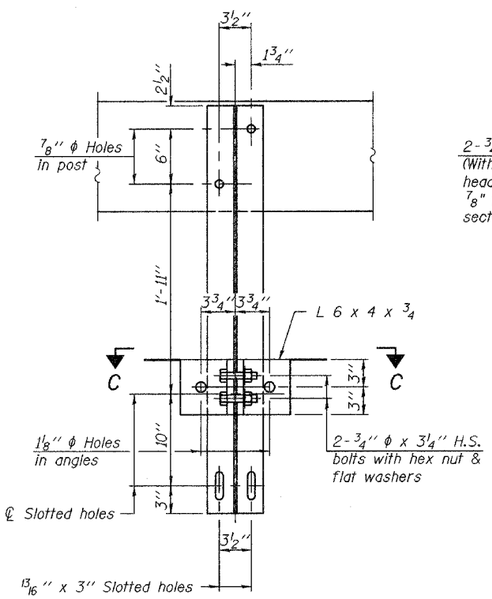

SECTION B-B

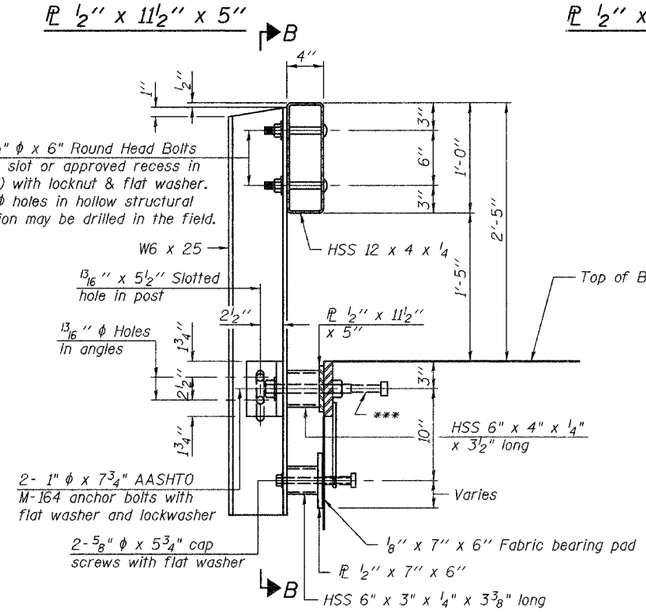

SECTION AT RAILING POST

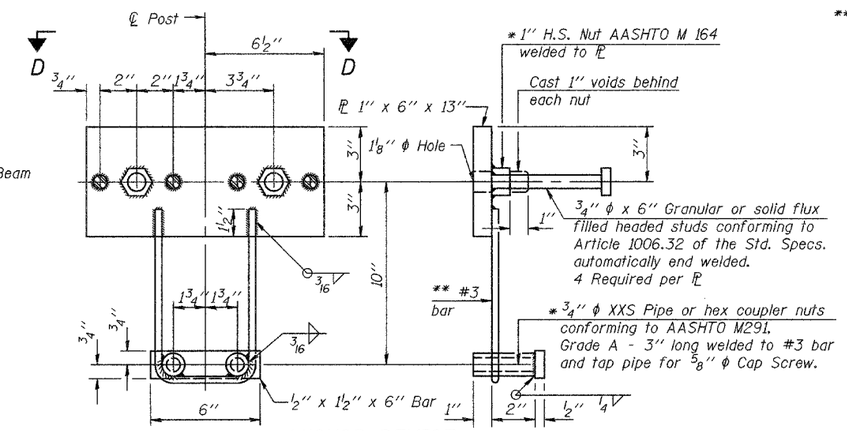

ANCHOR DEVICE

* Threaded areas shall be plugged or blocked off during casting of beam.

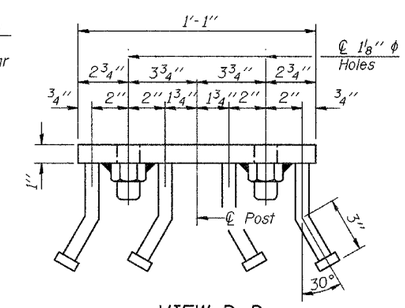

VIEW D-D

** Whenever the lower insert assemblies interfere with strand locations, the #3 bars shall be cut and adjusted in order to allow raising or lowering of the lower inserts. Maximum adjustment not to exceed 1/2".

1 1/8" ϕ Holes for 1" ϕ x 4" Round Head Bolts. Provide 2 flat washers & locknuts for Curled End Section connection.

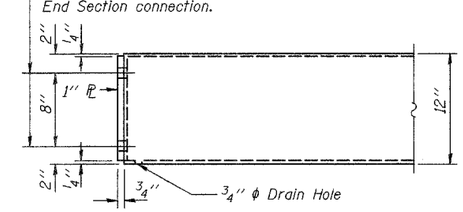

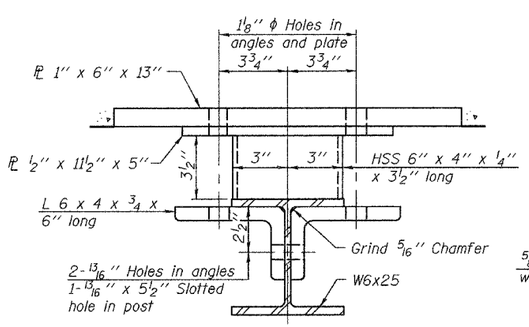

SECTION C-C

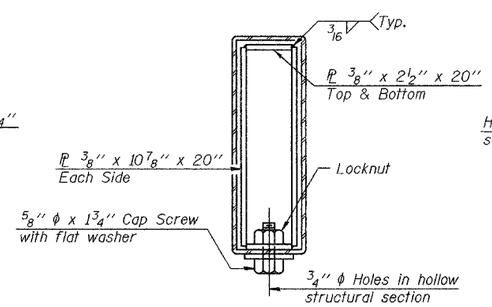

SECTIONS AT RAIL SPLICE

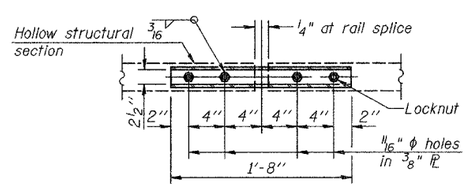

PLAN-BOTT. SPLICE PL
TYPICAL

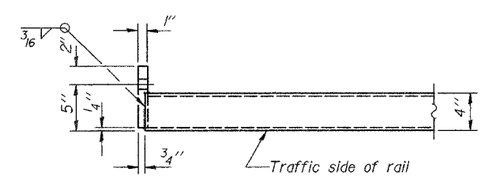

END OF RAIL DETAILS

BILL OF MATERIAL

Item	Unit	Quantity
Steel Railing, Type S-1	FOOT	232

STEEL RAILING, TYPE S-1
T.R. 434 OVER MUD CREEK
SECTION 06-26102-01-BR
IROQUOIS COUNTY
STATION 20+00.00

2465B004