ROUTE No.	SECTION	COUNTY	TOTAL SHEETS	SHEET NO.
F.A.P. 827	12Z-3, 12BR	WABASH, IL GIBSON, IN	158	73
STA.		TO STA.		
F.H.W.A. REGION		ILLINOIS	PROJECT	

BRIDGE SHEET S57 OF S114

CONTRACT 94450

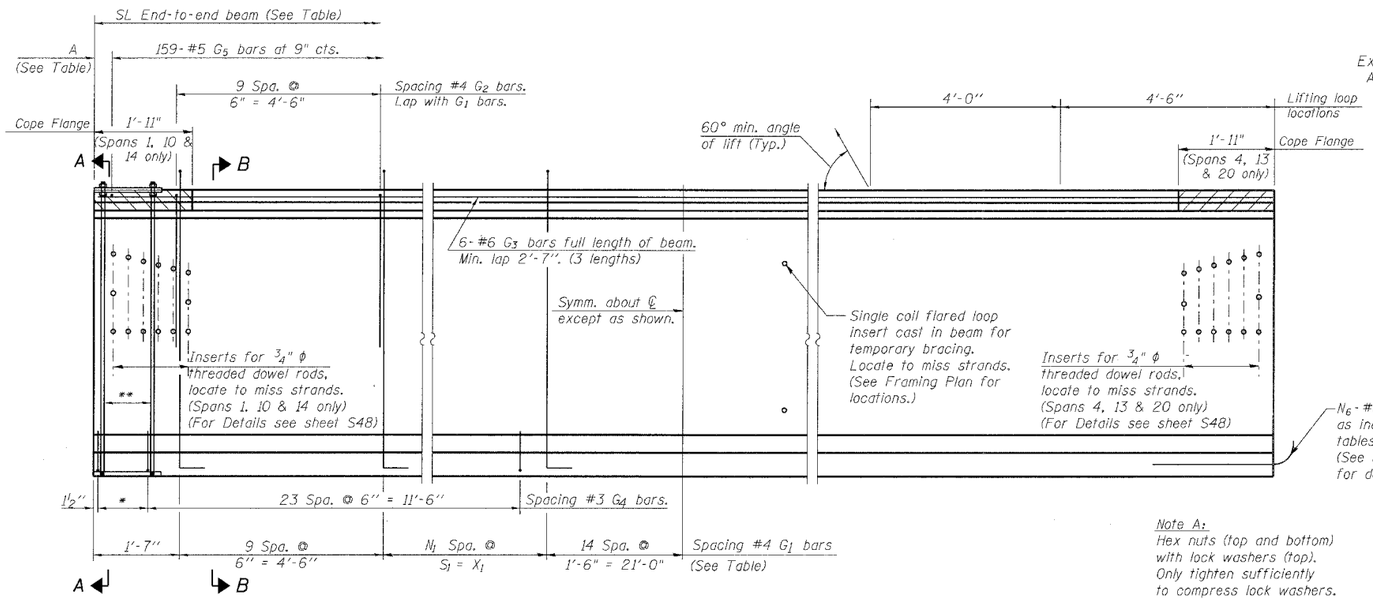

* 4 Spa. @ 3¼" = 1'-1".
** 5- ¾" ϕ threaded dowel rods at 3¼" cts., each face.

ELEVATION OF BEAM
(Showing reinforcement & dimensions)

Note A:
Hex nuts (top and bottom) with lock washers (top). Only tighten sufficiently to compress lock washers.

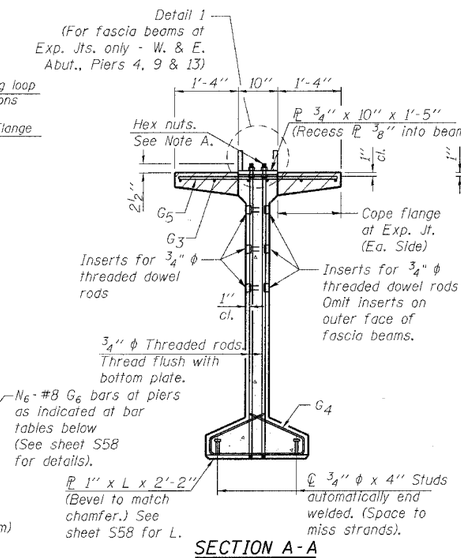

SECTION A-A

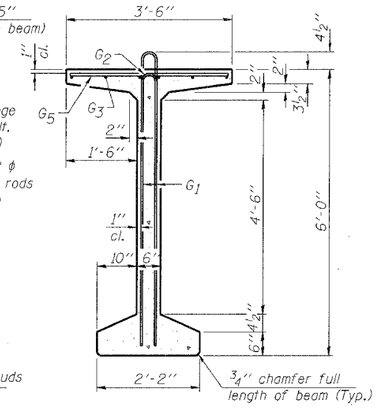

SECTION B-B

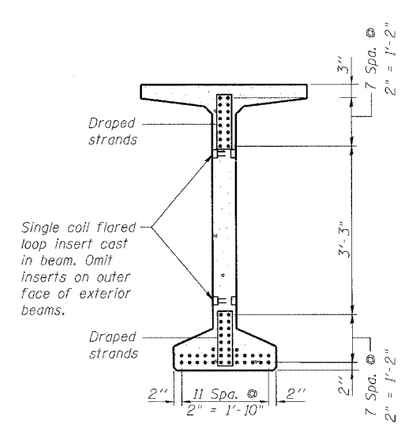

SECTION C-C

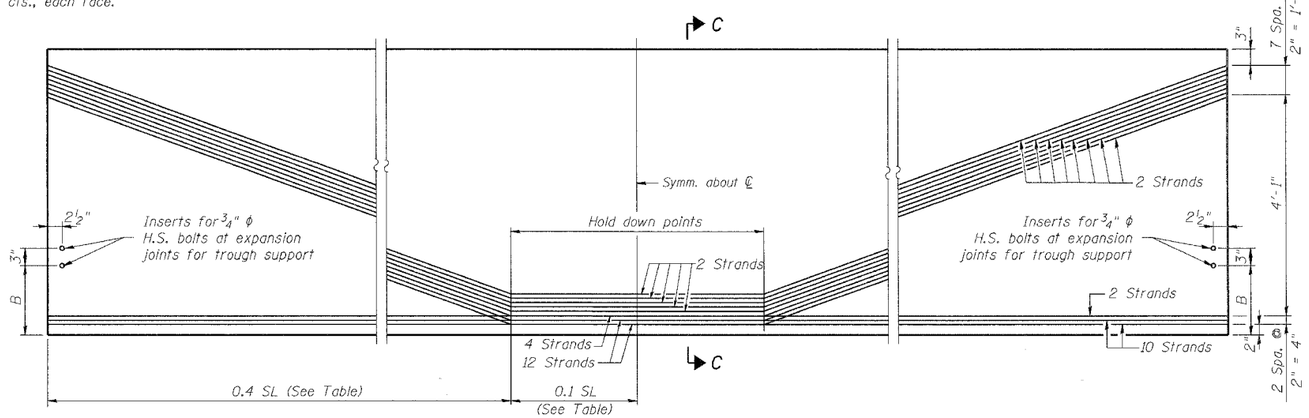

ELEVATION OF BEAM
(Showing prestressing steel)

SPANS 2, 3, 11, 12 & 15-19 BAR LIST ONE BEAM ONLY

Bar	No.	Size	Length	Shape
G1	163	#4	13'-5"	
G2	20	#4	7'-0"	
G3	18	#6	41'-6"	
G4	56	#3	4'-11"	
G5	159	#5	3'-4"	
G6	6	#8	3'-9"	

SPANS 1, 4, 10, 13, 14 & 20 BAR LIST ONE BEAM ONLY

Bar	No.	Size	Length	Shape
G1	163	#4	13'-5"	
G2	20	#4	7'-0"	
G3	18	#6	41'-6"	
G4	56	#3	4'-11"	
G5	159	#5	3'-4"	
G6	3	#8	3'-9"	

DIMENSION TABLE

Location	SL	0.4 SL	0.1 SL	A	N_1	S_1	X_1
Spans 1-3, 11, 12 & 15-20	119'-6"	47'-10"	11'-11"	6"	66	5 7/8"(+)	32'-8"
Spans 4 & 10	119'-1"	47'-7½"	11'-11"	3½"	66	5 7/8"(+)	32'-5½"
Spans 13 & 14	119'-4"	47'-9"	11'-11"	5"	66	5 7/8"(+)	32'-7"

N_6 - #8 G_6 Bars Required		
Location	Downstation	Upstation
Spans 1, 10 & 14	0	3
Spans 2, 3, 11, 12 & 15-19	3	3
Spans 4, 13 & 20	3	0

DIMENSION B TABLE

	Girder 1	Girder 2	Girder 3	Girder 4	Girder 5	Girder 6
Location						
W. Abut.	1'-0 9/16"	1'-3 7/8"	1'-7 11/16"	2'-0 3/16"	2'-4 1/8"	1'-9 11/16"
Pier 4	1'-0¼"	1'-5⅝"	1'-11½"	1'-11½"	1'-5⅝"	1'-0¼"
Pier 9	1'-0¼"	1'-5⅝"	1'-11½"	1'-11½"	1'-5⅝"	1'-0¼"
Pier 13***	1'-0½"	1'-5 13/16"	1'-11 11/16"	1'-11 11/16"	1'-5 13/16"	1'-0½"
E. Abut.	1'-0 11/16"	1'- 6"	1'-11¾"	1'-11¾"	1'- 6"	1'-0 11/16"

*** Dimensions apply to the PPC girders on both sides of the expansion joint, ie. each span.

NOTES:

1. For additional details and Bill of Material see Sheet S58.
2. Required release strength, f'ci, shall be 5,000 psi.
3. For Detail 1, see sheets S42 & S58.
4. Steel plate material shall be AASHTO M270, Gr. 36 except as noted.
5. For scupper locations where pipe clamp inserts are required, see Framing Plans.

DESIGNED	KWS
CHECKED	MRB
DRAWN	VLM
CHECKED	KWS

benesch

alfred benesch & company
Engineers • Surveyors • Planners
205 North Michigan Avenue, Suite 2400
Chicago, Illinois 60601
312-565-0450
Job No. 3426

ILLINOIS DEPARTMENT OF TRANSPORTATION
IL ROUTE 15/IN ROUTE 64
OVER WABASH RIVER PUBLIC WATERS
FAP 827 SECT 12Z-3, 12BR

72" BULB T-BEAM

SN: 093-0021 (IL)/9502700 (IN)
WABASH CO., IL.

STA. 1036+27
DATE: JUNE 15, 2007

m:\proj3426\stage_2\structures\design\super\sbltt001.dgn 1:00:59 PM 6/26/2007