STATE OF ILLINOIS
DEPARTMENT OF TRANSPORTATION

ROUTE NO.	SECTION	COUNTY	TOTAL SHEETS	SHEET NO.
FAP 327	(51-23) B-3	LAWRENCE	56	29
FED. ROAD DIST. NO. 7	ILLINOIS	FED. AID PROJECT-		

SHEET NO. 12
29 SHEETS

Contract No. 94967

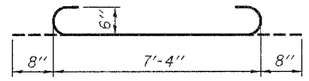

BAR a_7(E)

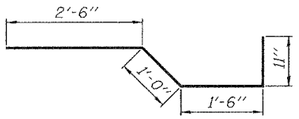

BAR x(E)

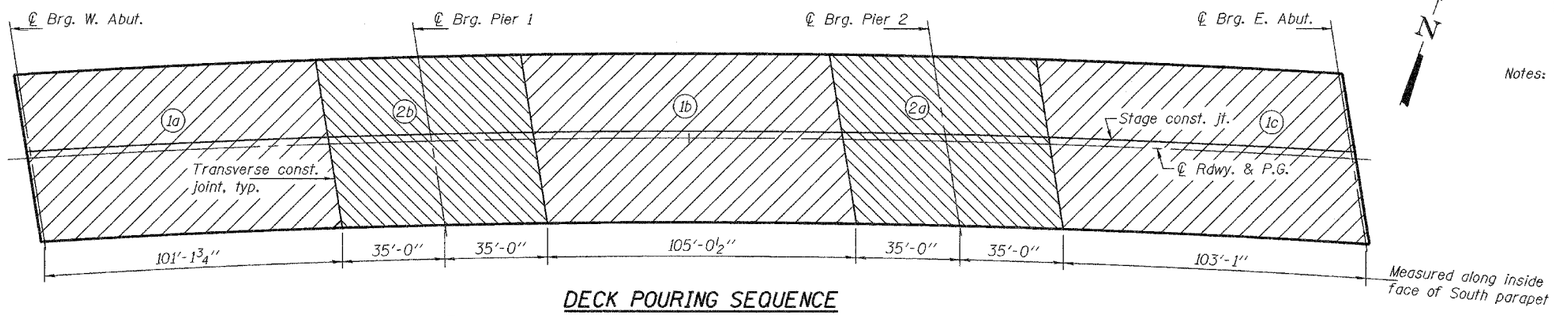

DECK POURING SEQUENCE

The concrete deck slab segments bearing the same numerical assignment may be cast in a single day in the alphabetical order shown.

Notes: When the deck pour is stopped for the day at one or more of the transverse bonded construction joints in the deck pouring sequence as shown, the next pour shall not be made until both of the following are met:

1) At least 72 hours shall have elapsed from the end of the previous pour.
2) The concrete strength shall have attained a minimum flexural strength of 650 psi or a minimum compressive strength of 3500 psi.

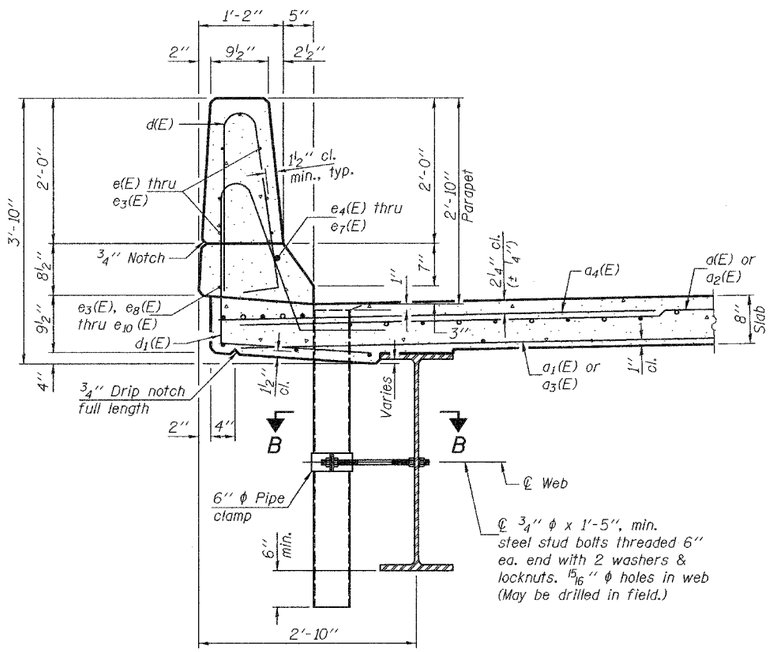

SECTION THRU PARAPET

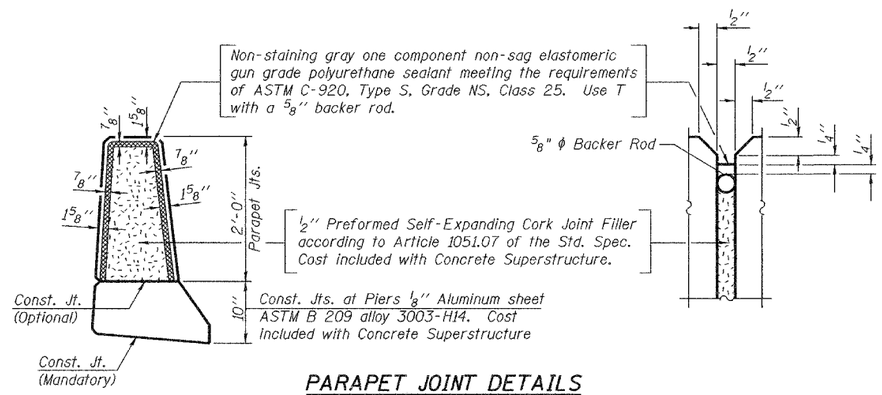

PARAPET JOINT DETAILS

Notes:

The exterior surfaces of the floor drains shall be painted with the finish coat as specified in the special provisions for Cleaning and Painting New Metal Structures. The exterior surfaces of the drains shall be cleaned according to Steel Structures Painting Council's Spec. SSPC-SP1 prior to painting.

Fiberglass pipe shall conform to ASTM D 2996, with short-time rupture strength hoop tensile stress of 30,000 p.s.i. minimum.

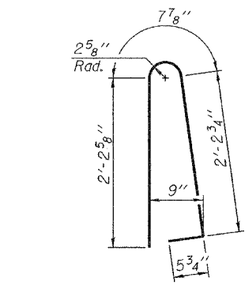

BAR d(E)

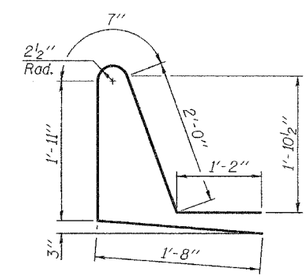

BAR d_1(E)

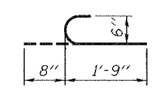

BAR a_8(E)

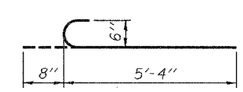

BAR a_9(E)

SUPERSTRUCTURE BILL OF MATERIAL

Bar	No.	Size	Length	Shape
d(E)	987	#5	19'-4''	
a_1(E)	604	#5	18'-7''	
a_2(E)	992	#5	22'-10''	
a_3(E)	607	#5	22'-1''	
a_4(E)	1979	#6	6'-0''	
a_5(E)	2	#6	16'-8''	
a_6(E)	8	#7	19'-6''	
a_7(E)	24	#6	8'-8''	
a_8(E)	6	#6	2'-5''	
a_9(E)	6	#6	6'-0''	
a_{10}(E)	2	#6	20'-2''	
a_{11}(E)	8	#7	23'-0''	
b(E)	782	#5	28'-9''	
b_1(E)	756	#5	27'-3''	
b_2(E)	258	#6	32'-0''	
d(E)	986	#5	5'-7''	
d_1(E)	986	#5	7'-4''	
e(E)	84	#4	19'-2''	
e_1(E)	98	#4	18'-11''	
e_2(E)	84	#4	19'-6''	
e_3(E)	64	#4	19'-8''	
e_4(E)	8	#8	32'-0''	
e_5(E)	10	#8	29'-9''	
e_6(E)	8	#8	32'-6''	
e_7(E)	8	#8	19'-6''	
e_8(E)	10	#4	24'-7''	
e_9(E)	10	#4	28'-1''	
e_{10}(E)	10	#4	25'-0''	
x(E)	78	#5	5'-11''	
Reinforcement Bars, Epoxy Coated			Pound	166700
Concrete Superstructure			Cu. Yds.	624.7
Bar Splicers			Each	1607

Bars indicated thus 1 x 6 - #5 etc. indicates 1 line of bars with 6 lengths per line.

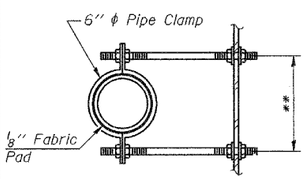

SECTION B-B

**Dimension as required by Pipe Clamp

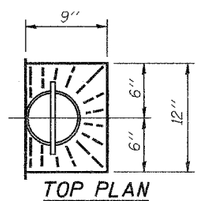

TOP PLAN

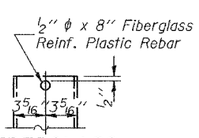

FIBERGLASS PIPE

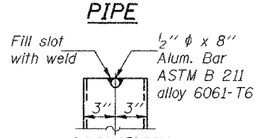

ALUMINUM TUBE

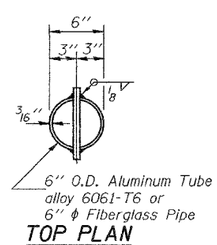

TOP PLAN
(Showing Aluminum Tube)

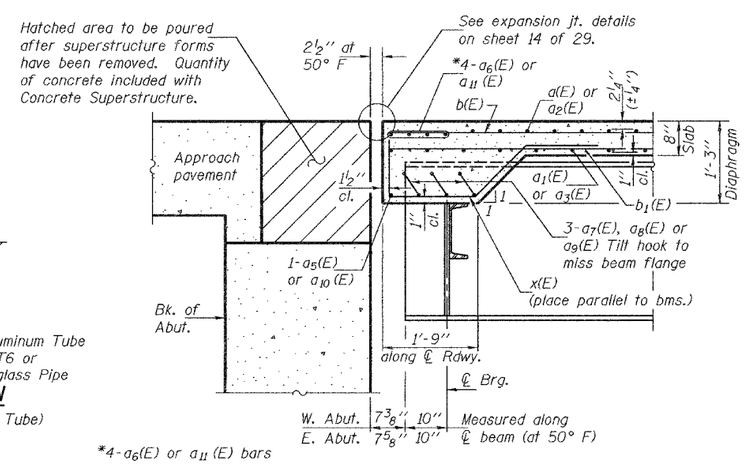

*4-a_6(E) or a_{11}(E) bars at 4'' spacing. Place under longitudinal bars.

SECTION A-A

DESIGNED	Chad E. Hodel
CHECKED	Mark D. Shaffer
DRAWN	h.t. duong
CHECKED	CEH/MDS

Oct. 2, 2007
EXAMINED Thomas J. Domagalski
ENGINEER OF BRIDGE DESIGN
PASSED Ralph E. Anderson
ENGINEER OF BRIDGES AND STRUCTURES

SUPERSTRUCTURE DETAILS
F.A.P. RT. 327 - SEC. (51-23)B-3
LAWRENCE COUNTY
STATION 553+95.50
STRUCTURE NO. 051-0063

...\projects\htd0025\0510063.dgn 10/2/2007 1:04:16 PM