F.A.P. RTE.	SECTION	COUNTY	TOTAL SHEETS	SHEET NO.
343	*	COOK	24	15
STA.	TO STA.			
FED. ROAD DIST. NO.	ILLINOIS	FED. AID PROJECT		

*70HB-F & 70D-Y-B-F CONTRACT NO. 60B70

Girder 1

Location	Station	Offset	Theoretical Grade Elevations	Theoretical Grade Elevations Adjusted For Dead Load Deflection
Back W. Abut.	9+872.539	-12.671	269.592	269.592
℄ Brg. W. Abut.	9+873.746	-12.633	269.607	269.607
A	9+876.702	-12.547	269.642	269.680
B	9+879.659	-12.471	269.675	269.747
C	9+882.616	-12.405	269.707	269.809
D	9+885.574	-12.350	269.737	269.861
E	9+888.532	-12.304	269.765	269.904
F	9+891.490	-12.269	269.792	269.936
G	9+894.448	-12.243	269.817	269.957
H	9+897.407	-12.228	269.840	269.967
I	9+900.365	-12.223	269.862	269.967
J	9+903.324	-12.229	269.882	269.958
K	9+906.283	-12.244	269.901	269.943
℄ Brg. E. Abut.	9+909.581	-12.273	269.919	269.919
Back E. Abut.	9+910.789	-12.287	269.926	269.926

Girder 2

Location	Station	Offset	Theoretical Grade Elevations	Theoretical Grade Elevations Adjusted For Dead Load Deflection
Back W. Abut.	9+874.422	-9.787	269.547	269.547
℄ Brg. W. Abut.	9+875.632	-9.752	269.562	269.562
A	9+878.599	-9.672	269.596	269.634
B	9+881.565	-9.603	269.629	269.701
C	9+884.532	-9.543	269.659	269.761
D	9+887.499	-9.494	269.688	269.812
E	9+890.467	-9.456	269.715	269.854
F	9+893.435	-9.427	269.741	269.885
G	9+896.403	-9.408	269.765	269.905
H	9+899.371	-9.400	269.787	269.914
I	9+902.339	-9.402	269.808	269.913
J	9+905.307	-9.414	269.827	269.903
K	9+908.275	-9.436	269.844	269.886
℄ Brg. E. Abut.	9+911.584	-9.473	269.862	269.862
Back E. Abut.	9+912.795	-9.489	269.868	269.868

Girder 3

Location	Station	Offset	Theoretical Grade Elevations	Theoretical Grade Elevations Adjusted For Dead Load Deflection
Back W. Abut.	9+876.317	-6.907	269.502	269.502
℄ Brg. W. Abut.	9+877.532	-6.875	269.516	269.516
A	9+880.508	-6.802	269.549	269.587
B	9+883.484	-6.739	269.580	269.652
C	9+886.461	-6.686	269.610	269.712
D	9+889.438	-6.644	269.638	269.762
E	9+892.415	-6.611	269.664	269.803
F	9+895.392	-6.589	269.689	269.833
G	9+898.370	-6.578	269.712	269.852
H	9+901.347	-6.576	269.733	269.860
I	9+904.325	-6.585	269.753	269.858
J	9+907.303	-6.603	269.771	269.847
K	9+910.280	-6.633	269.787	269.829
℄ Brg. E. Abut.	9+913.599	-6.677	269.804	269.804
Back E. Abut.	9+914.814	-6.696	269.809	269.809

Girder 4

Location	Station	Offset	Theoretical Grade Elevations	Theoretical Grade Elevations Adjusted For Dead Load Deflection
Back W. Abut.	9+878.225	-4.032	269.456	269.456
℄ Brg. W. Abut.	9+879.443	-4.002	269.469	269.469
A	9+882.429	-3.935	269.501	269.539
B	9+885.415	-3.879	269.532	269.604
C	9+888.402	-3.833	269.561	269.663
D	9+891.388	-3.797	269.588	269.712
E	9+894.375	-3.772	269.613	269.752
F	9+897.362	-3.756	269.637	269.781
G	9+900.350	-3.751	269.659	269.799
H	9+903.337	-3.757	269.679	269.806
I	9+906.324	-3.772	269.698	269.803
J	9+909.311	-3.798	269.715	269.791
K	9+912.298	-3.834	269.730	269.772
℄ Brg. E. Abut.	9+915.628	-3.886	269.745	269.745
Back E. Abut.	9+916.846	-3.908	269.750	269.750

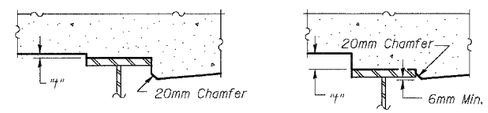

At Minimum Fillet

At Maximum Fillet

To determine fillet height "t", measure elevations at intervals as shown after all steel has been erected. Add this number to the slab thickness and subtract the sum from the "Theoritical Grade Elev. Adjusted for Dead Load Deflection." This equals the fillet height above the girders.

FILLET HEIGHTS

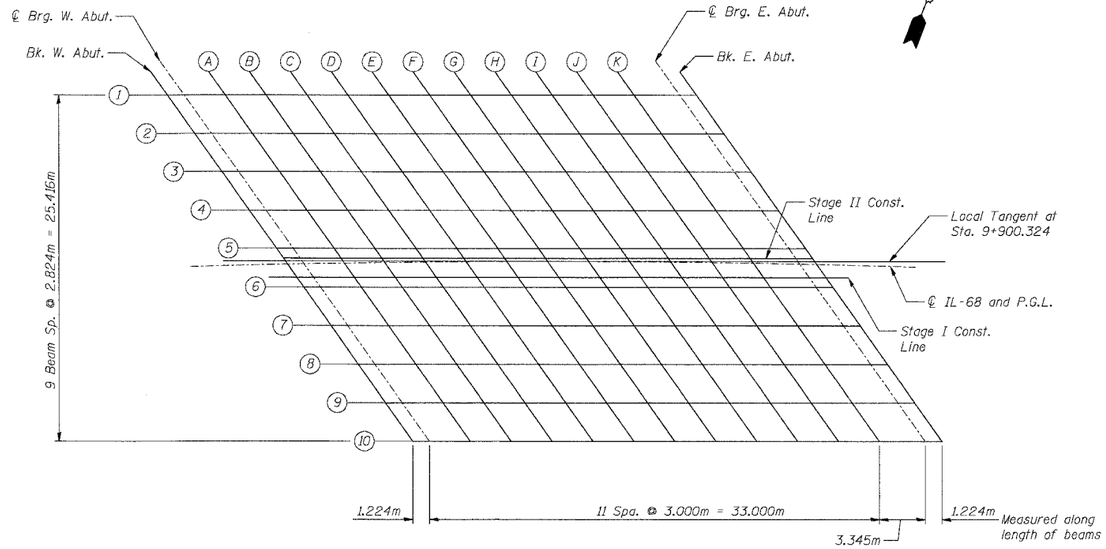

SCREED PLAN

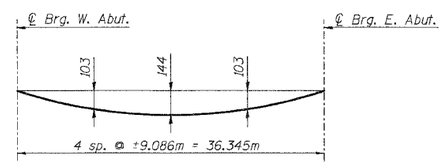

DEAD LOAD DEFLECTION DIAGRAM

(Includes weight of concrete only)

Note: The above deflections are not to be used in the field if the engineer is working from the grade elevations adjusted for dead load deflections as shown above.

FOR INFORMATION ONLY

SHT. S-15 OF S-24

REVISIONS	
NAME	DATE

ILLINOIS DEPARTMENT OF TRANSPORTATION

IL ROUTE 68 OVER US-14 & UPRR
F.A.P. ROUTE 343 SECTION 70HB-F & 70D-Y-B-F
COOK COUNTY
STRUCTURE NO. 016-2861 & 016-2732

SCREED PLAN & TOP OF DECK ELEVATIONS
SN 016-2732

DESIGNED: BTO DRAWN: BTO
DATE: 6/06 CHECKED: JAN CHECKED: JAN

...\454_p1_s15bp.dgn 8/23/2006 2:42:08 PM